PARSONS

PARSONS

LEAP Bridge Case Study

The New I-64 Design Build Project

Tori Goessling, P.E.

St. Louis, Missouri

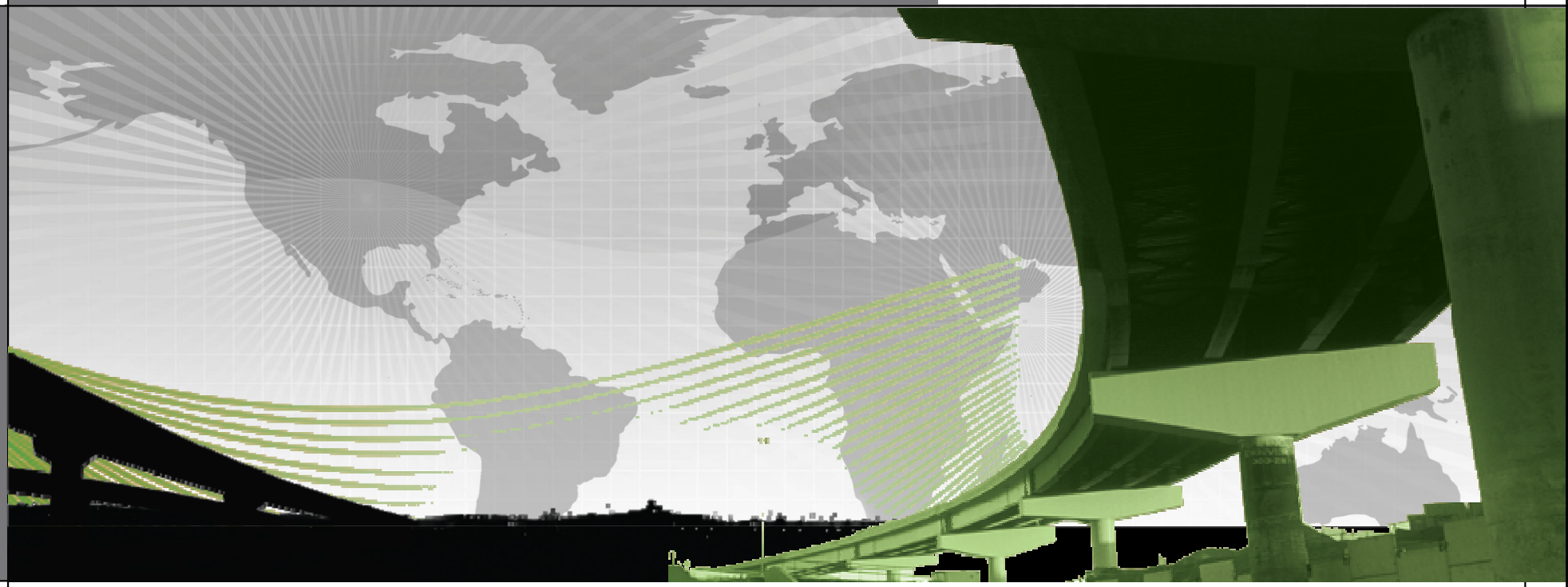

Metro St. Louis

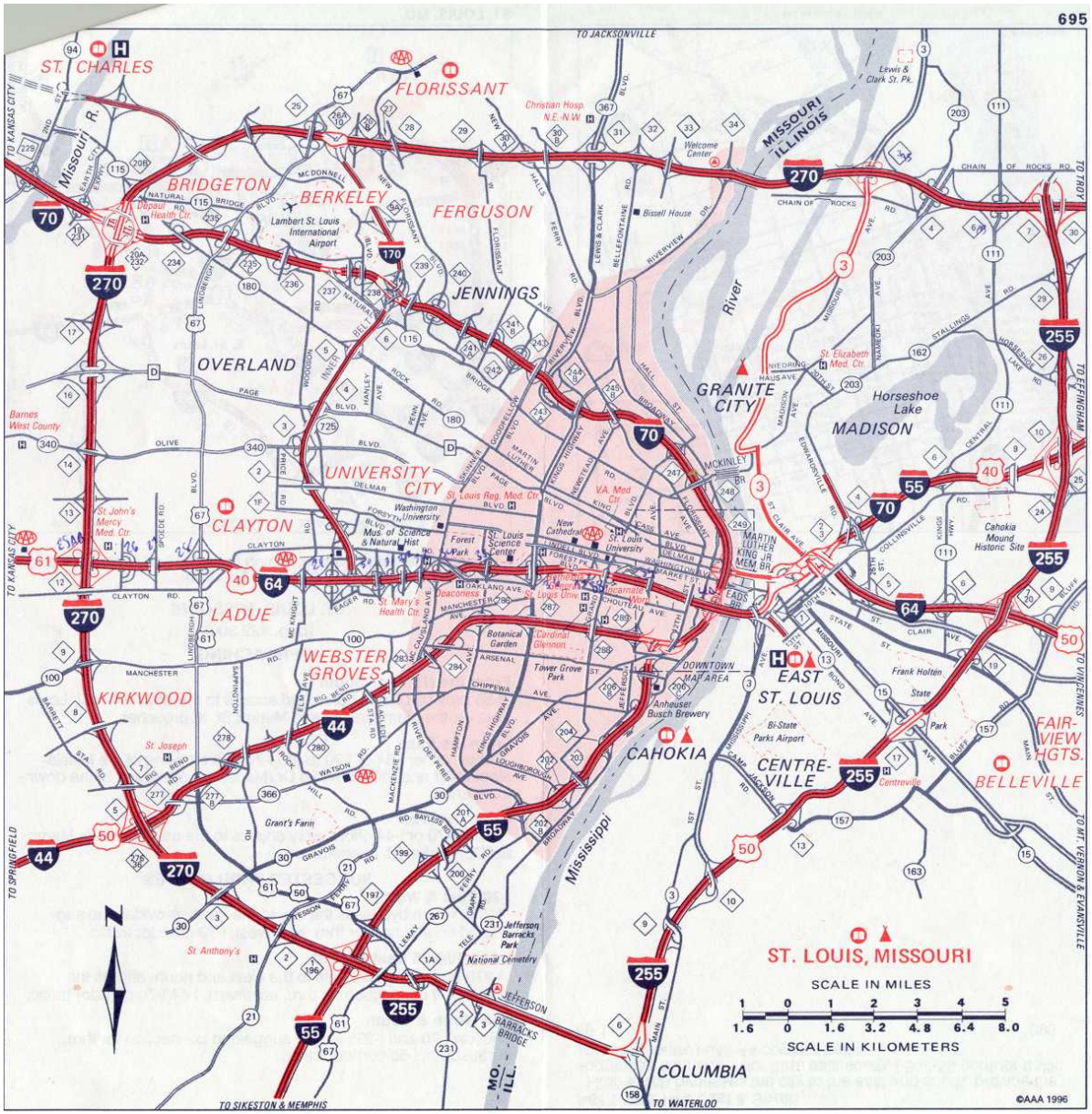

Highway 40

- Originally constructed in the late 1930s to the early 1960s.
  - 4-Lane Divided Highway
  - Short, tight ramps
  - Narrow shoulders
- An ineffective interchange with I-170
- Rechristened Interstate 64 in 1988 despite it’s failure to comply with interstate standards
- Carrying only 75% of it’s capacity

Old Interchange with I-170

Project Limits

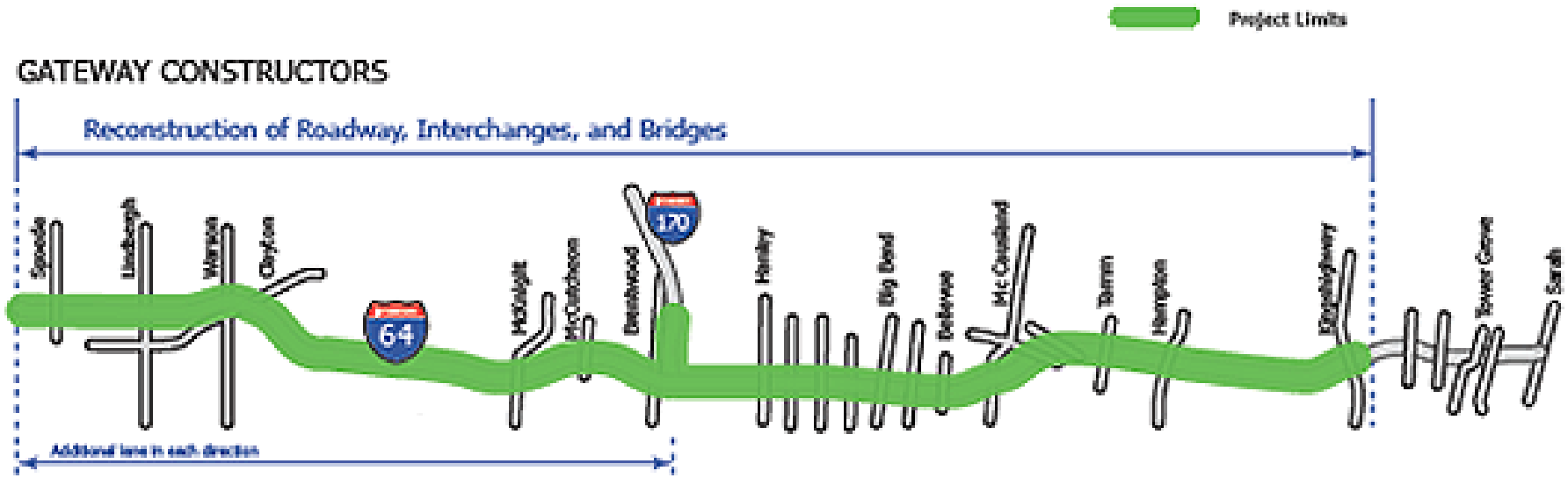

Scope of Work

- 10 Miles of Pavement
- 36 Structures
- 11 Interchanges
- 1 Freeway to Freeway Interchange
- Sound Walls
- Retaining Walls

Gateway Constructors
Granite • Fred Weber • Millstone Bangert

To Close or Not To Close…

- Reduced construction time
- Less economic impact
- Narrow corridor
- Large network of interstates and arterial roads that could be used as detour routes

Regional Improvements

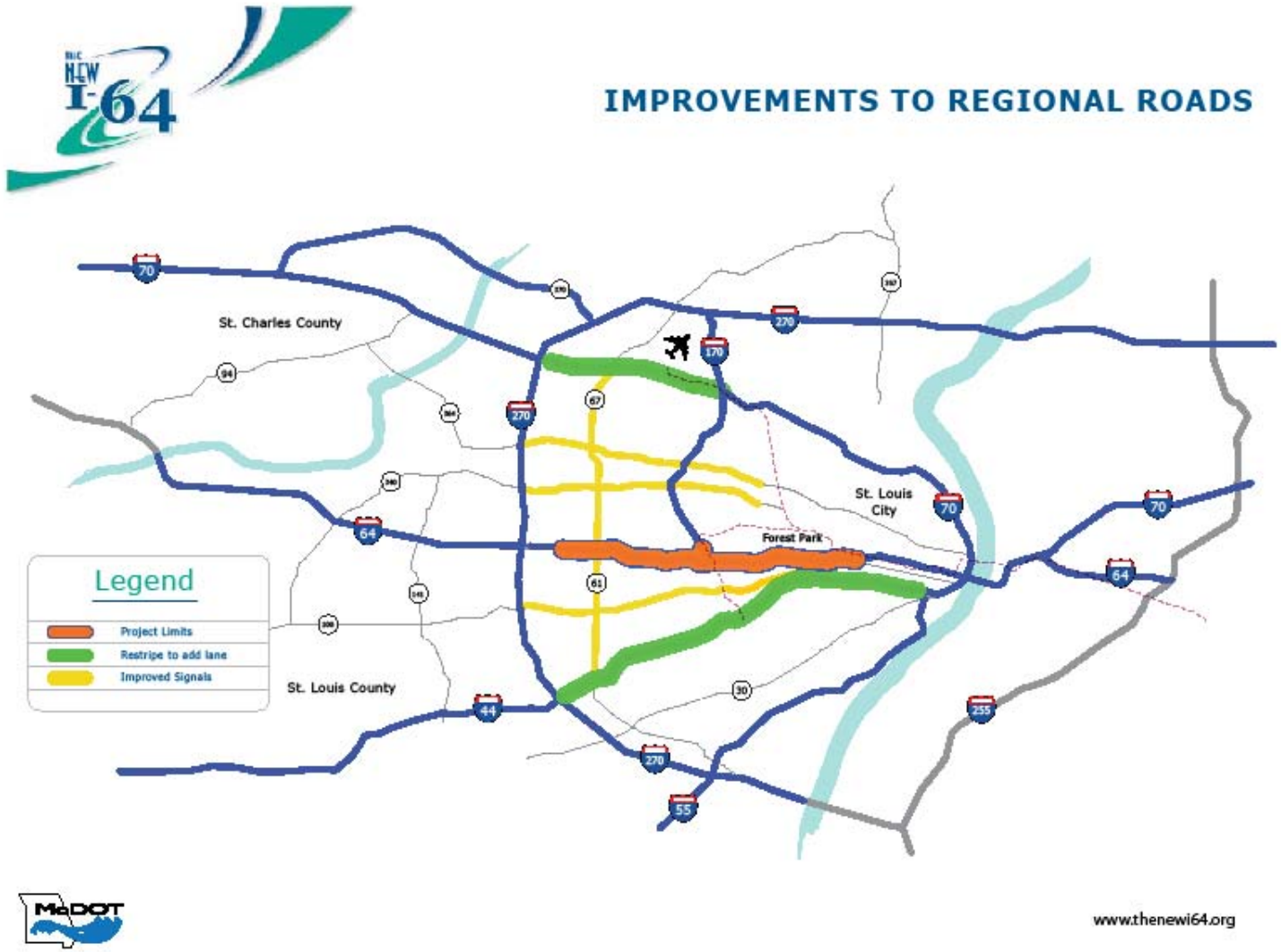

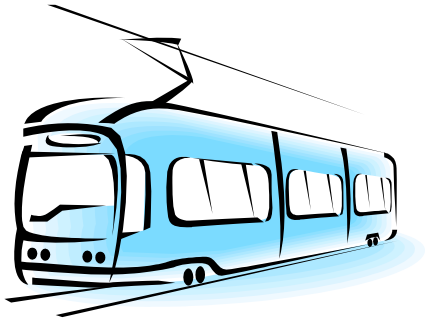

ROAD
CLOSED
AHEAD

Project Segments

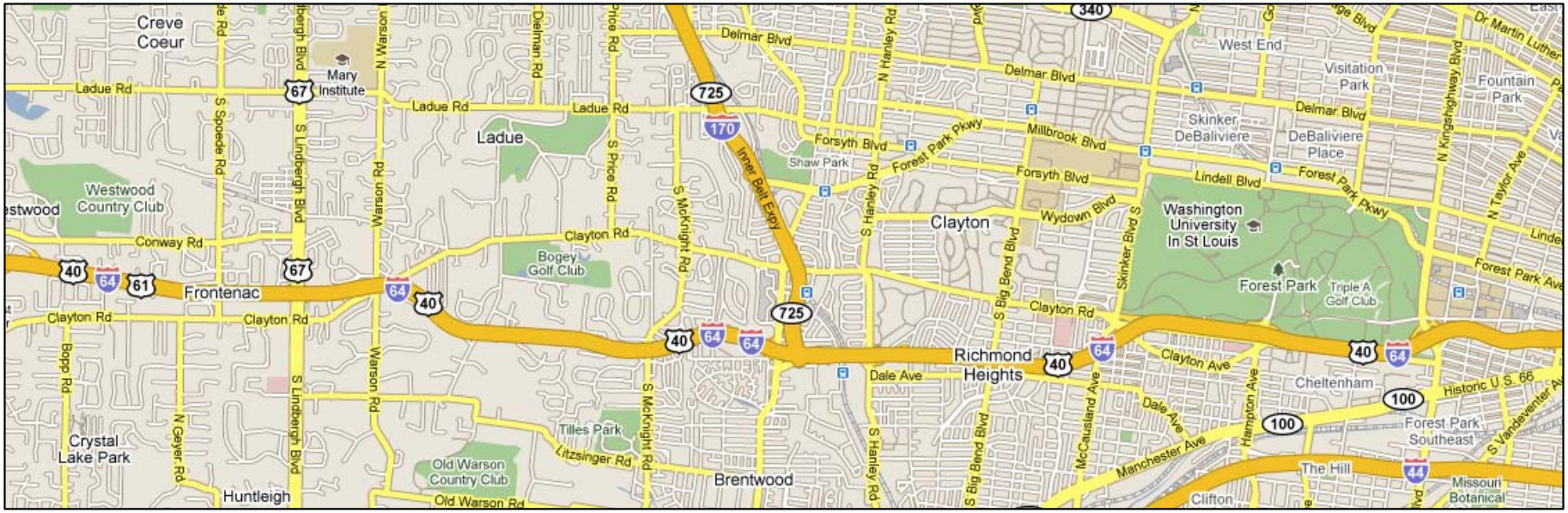

Horner & Shiffrin	Parsons	URS
Segment 1	Segment 2	Segment 3

Structure's Design Schedule

THE NEW I-64 PROPOSED STRUCTURES

Co.	Br. No.	Location	RFC	Start	30%	86%	100%	RFC SET TO QA		DEC	JAN	FEB	MAR	APR	MAY	JUN	JUL	AUG	SEPT	OCT	NOV	DEC	JAN
H&S	1	Spoede over I-64	Fri 11/16	Mon 7/02	Fri 8/10	Mon 10/01	Fri 11/02	Fri 11/09															
H&S	2	I-64 over Lindbergh (SPUI)	Fri 8/17	Mon 1/29		Mon 7/09	Fri 8/03	Fri 8/10															
		30% Package for Early Const		Mon 1/29	Fri 3/23			Fri 3/23															
		Early Mill Order Package	Fri 6/01	Mon 4/02		Mon 5/07	Tue 5/29	Tue 5/29															
H&S	3	I-64 WB over Clayton-Warson	Fri 11/30	Mon 5/21		Wed 10/17	Wed 11/21	Fri 11/30															
		30% Package for Early Const		Mon 5/21	Fri 6/29			Fri 6/29															
		~~Early Precast Package~~	~~Wed 10/24~~	~~Fri 5/29~~		~~Wed 10/17~~	~~Wed 10/24~~	~~Wed 10/24~~															
PTG	4	Hanley over Eager Road	Mon 2/11	Mon 11/12	Mon 11/26	Mon 1/07	Mon 1/28	Thu 2/07															
H&S	5	McKnight over I-64	Wed 9/05	Sun 5/13	Fri 6/22	Fri 7/20	Wed 8/22	Wed 8/29															
H&S	6	McCutcheon over I-64	Wed 12/12	Mon 5/07	Fri 5/25	Wed 10/24	Wed 11/28	Wed 12/05															
PTG	7	I-64 over Brentwood	Fri 12/21	Sat 9/01	Fri 9/21	Fri 11/02	Wed 11/28	Fri 12/14															
PTG	8	I-64 over I-170 Connector	Mon 7/02	Mon 2/26	Fri 4/27	Mon 5/14	Fri 6/08	Mon 6/25															
PTG	9	CD WB to Brentwood over I-170	Wed 7/11	Mon 3/05	Fri 4/27	Thu 5/24	Mon 6/18	Wed 7/04															
PTG	10	CD over I-170 Connector	Fri 9/14	Sun 6/03	Fri 6/22	Tue 7/31	Thu 8/23	Fri 9/07															
PTG	11	I-170 SB to I-64 WB over I-170 Conn (S to W)	Fri 8/10	Wed 5/09		Thu 6/21	Tue 7/17	Fri 8/03															
		30% Package for Early Const		Tue 4/03	Mon 5/07			Mon 5/07															
		Early Mill Order Package	Wed 6/20	Tue 4/03		Wed 5/30	Wed 6/13	Wed 6/20															
PTG	12	I-170 SB to I-64 WB over Brentwood (S to W)	Fri 12/14	Thu 9/20	Fri 10/05	Tue 11/06	Mon 11/26	Fri 12/07															
PTG	13	I-64 EB to I-170 NB (E to N)	Wed 8/15	Tue 5/08		Sat 6/16	Thu 7/19	Wed 8/08															
		30% Package for Early Const		Sat 1/06	Mon 2/26			Mon 2/26															
		Early Mill Order Package	Thu 3/15	Thu 2/01		Thu 3/01	Tue 3/13	Tue 3/13															
		Early Substructure Package	Wed 6/13	Sun 2/11		Mon 4/16	Thu 5/17	Wed 6/06															
PTG	14	I-170 SB to I-64 EB (S to E)	Mon 5/21	Thu 3/08		Thu 4/05	Sun 4/29	Mon 5/14															
		30% Package for Early Const		Tue 12/19	Thu 1/25			Thu 1/25															
		Early Mill Order Package	Thu 2/15	Sun 1/07		Wed 1/24	Tue 2/13	Tue 2/13															
		Early Substructure Package	Sun 4/01	Sat 12/16		Thu 2/01	Sat 3/10	Sun 3/25															
PTG	15	I-64 WB to I-170 NB (W to N)	Thu 3/15	Mon 1/22		Tue 2/13	Tue 2/27	Thu 3/08															
		30% Package for Early Const		Sun 12/24	Wed 1/10			Wed 1/10															
		Early Mill Order Package	Mon 1/15	Fri 12/08		Sun 1/07	Thu 1/11	Thu 1/11															
PTG	16	Hanley over I-64	Fri 11/30	Wed 8/08	Wed 8/29	Thu 10/11	Wed 11/07	Fri 11/23															
PTG	17	I-64 over Laclede Station	Fri 9/21	Sun 6/03	Sat 6/23	Fri 8/03	Wed 8/29	Fri 9/14															
PTG	18	Boland over I-64	Mon 9/10	Thu 5/10	Sat 6/02	Wed 7/18	Thu 8/16	Mon 9/03															
AFRAM	19	I-64 over Claytonia	Fri 12/14	Sun 8/05	Thu 8/30	Fri 10/19	Mon 11/19	Fri 12/07															
PTG	20	Big Bend over I-64	Fri 6/15	Wed 2/21	Wed 3/14	Thu 4/26	Wed 5/23	Fri 6/08															
AFRAM	21	Highland over I-64	Wed 8/15	Mon 4/02	Sat 4/28	Mon 6/18	Thu 7/19	Wed 8/08															
AFRAM	22	Bellevue over I-64	Mon 7/02	Sat 3/24	Tue 4/17	Mon 6/04	Mon 6/18	Thu 6/28															
URS	23	I-64 over McCausland	Mon 7/09	Tue 3/20	Thu 4/26	Thu 5/24	Fri 6/22	Mon 7/02															
URS	24	Clayton over I-64	Tue 10/02	Mon 7/16	Thu 8/23	Mon 9/03	Thu 9/13	Fri 9/28															
URS	25	Oakland over I-64	Mon 10/01	Mon 4/16	Thu 5/24	Thu 7/12	Fri 8/24	Thu 9/27															
URS	26	Clayton to I-64 EB over I-64	Tue 10/30	Mon 4/16	Thu 5/24	Mon 9/24	Tue 10/16	Fri 10/26															
URS	27	Tamm over I-64	Fri 4/06	Sun 2/04	Thu 2/15	Thu 3/08	Wed 3/21	Fri 3/30															
URS	28	SPUI - Hampton over I-64	Wed 11/14	Mon 6/11	Tue 8/21	Fri 10/05	Fri 11/02	Mon 11/12															
URS	29	Hamton over I-64 EB to Oakland	Wed 10/31	Mon 6/11	Tue 8/21	Fri 9/21	Mon 10/15	Fri 10/26															
URS	30	Pedestrian Tunnel at Hampton Roundabout	Tue 12/18	Mon 6/11	Wed 10/03	Fri 11/09	Wed 12/05	Fri 12/14															
URS	32	Pedestrian Tunnel at Mackland	Fri 11/30	Mon 7/16	Wed 8/08	Wed 11/07	Wed 11/21	Tue 11/27															
URS	33	SPUI - Kingshighway over I-64	Fri 5/04	Fri 1/12	Fri 2/02	Fri 3/16	Wed 4/11	Fri 4/27															
URS	34	Pedestrian Overpass @ CID	Tue 12/18	Mon 7/30	Thu 9/13	Thu 11/08	Tue 12/04	Fri 12/14															
URS	36	Kingshighway over Clayton	Wed 4/04	Mon 1/22	Sun 2/04	Fri 3/02	Sun 3/18	Wed 3/28															

4 Types of Bridges

- **Pre-stressed Concrete**
  - **Single Span**
  - **Multi-Span**

- **Steel Plate Girders**
  - **Single Span**
  - **Multi-Span Flyover Ramps**

Flyover Ramp Typical Section

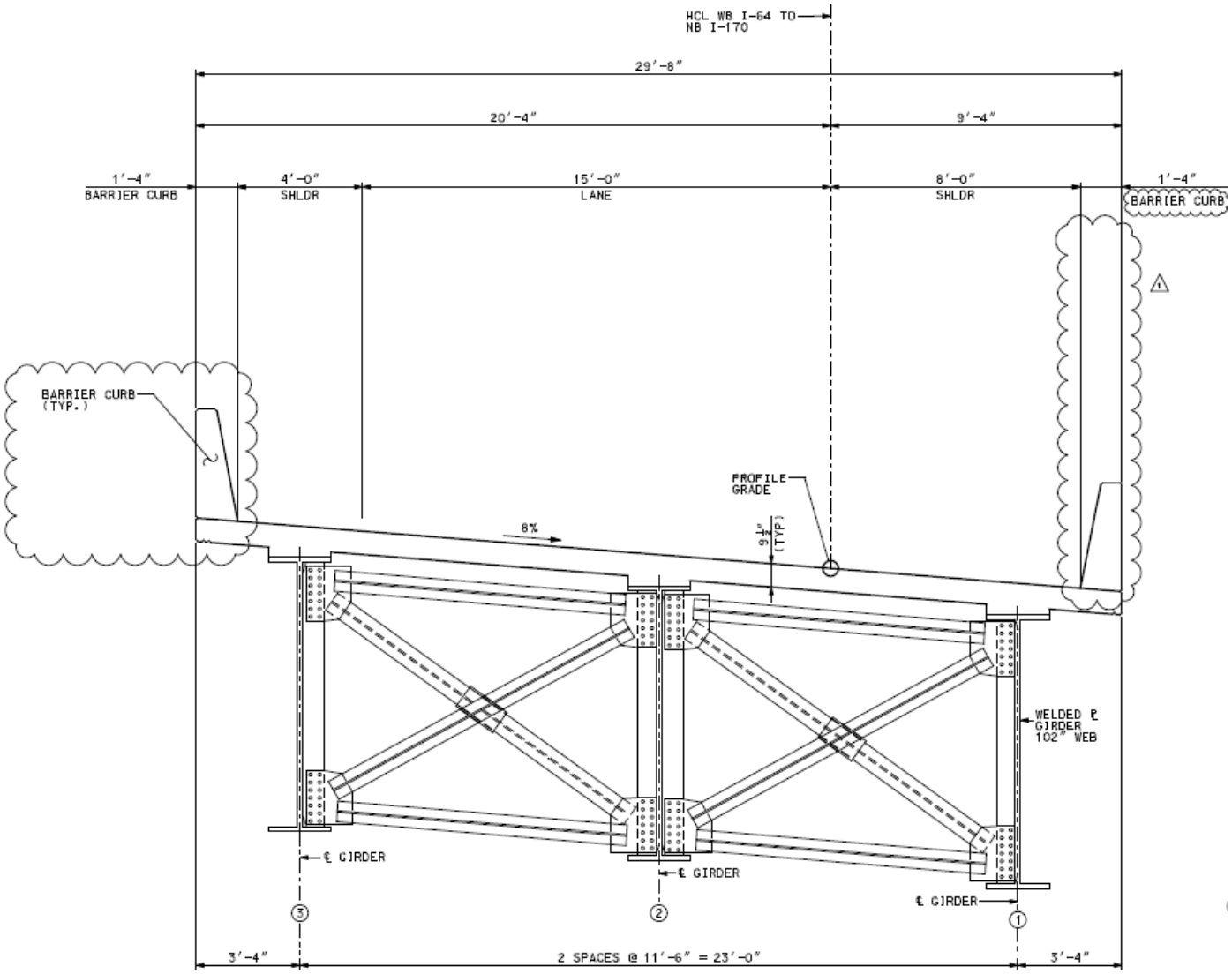

TYPICAL SECTION
LOOKING UPSTATION

SB I-170 to EB I-64 before closure

I-170 Interchange with West Half Closure

Pre-stressed Concrete Bridges

36” AASHTO Beam	2
42” AASHTO Beam	1
45” AASHTO Beam (modified)	1
48” AASHTO Beam	3
54” AASHTO Beam	7
63” Bulb Tee	6
72” Bulb Tee	5
24” x 48” Box Beam	1

The New I-64 Design Build

- AASHTO Load Factor Design Methodology
- LEAP Bridge Software
  - CONSPAN v6.0.0
  - RC-PIER v7.0.0
- Tight Schedule / Deadlines
- QA/QC Validation
- Post-Design Services
  - Shop Drawings
  - RFIs
  - Field Design Changes
  - Oopsies

End Bent on Piles behind MSE Wall

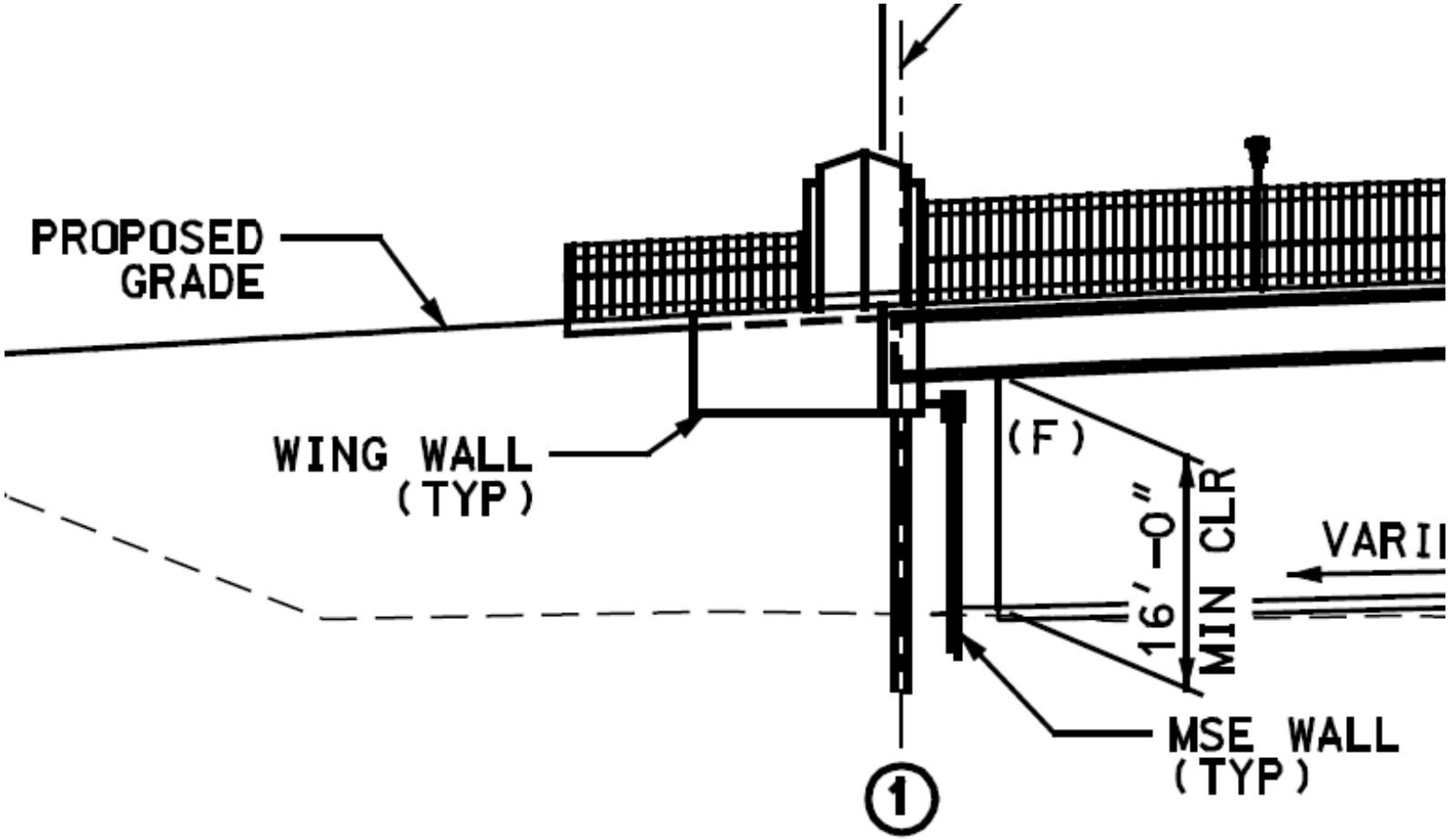

No Room For Widening!

Bent on Drilled Shaft / Rock Socket

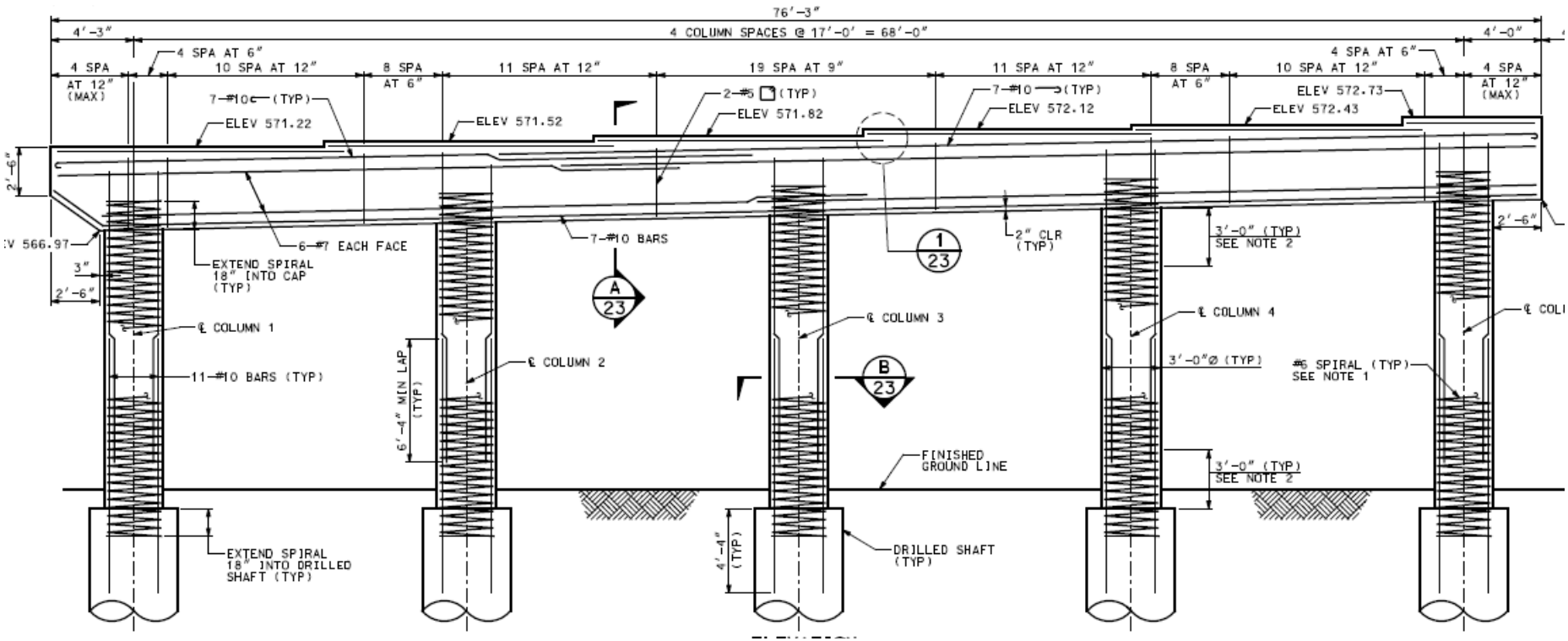

Bent on Shallow Spread Footings

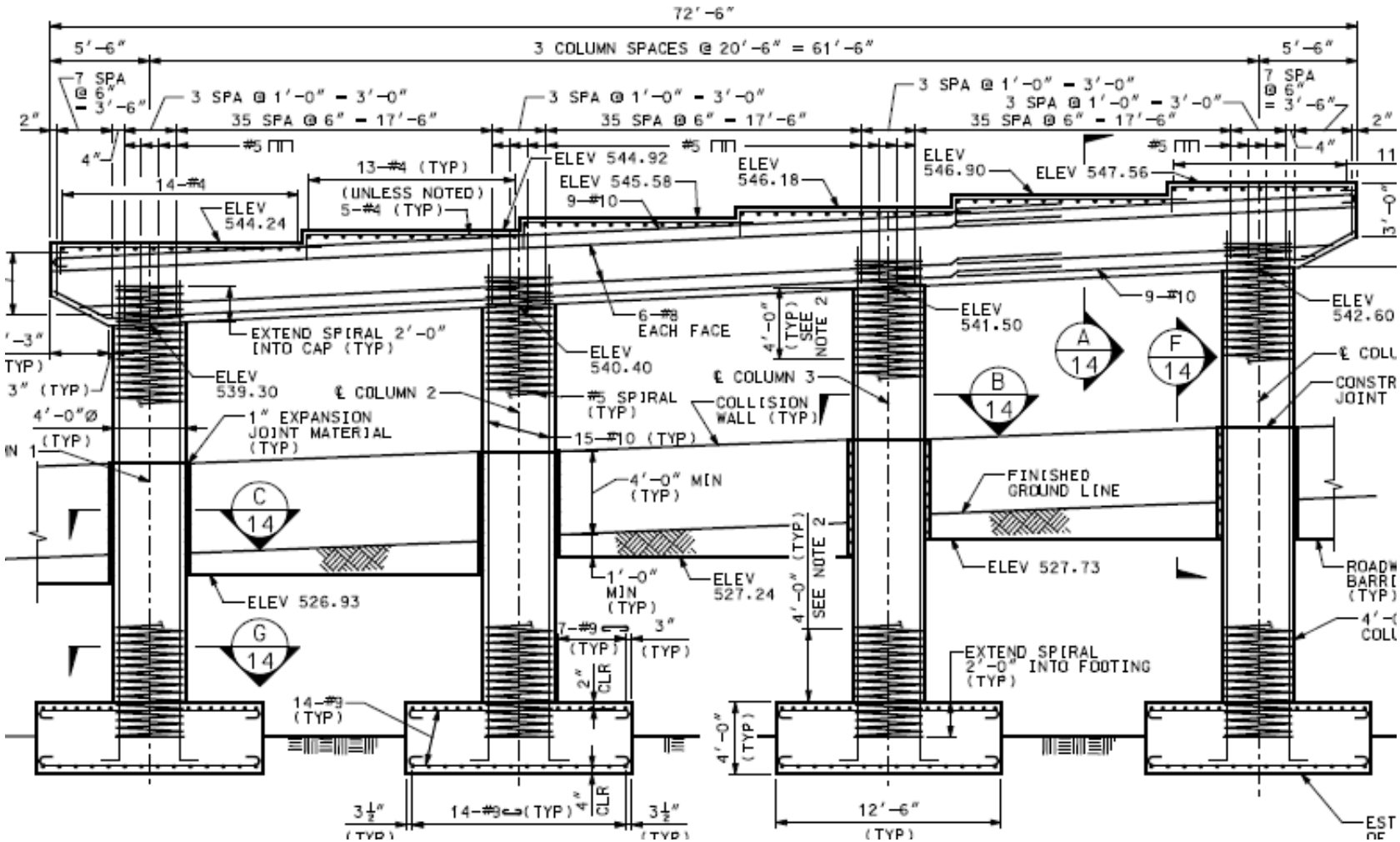

Existing I-64 over Clayton-Warson Bridge

Existing I-64 over Clayton-Warson

I-64 over Clayton-Warson

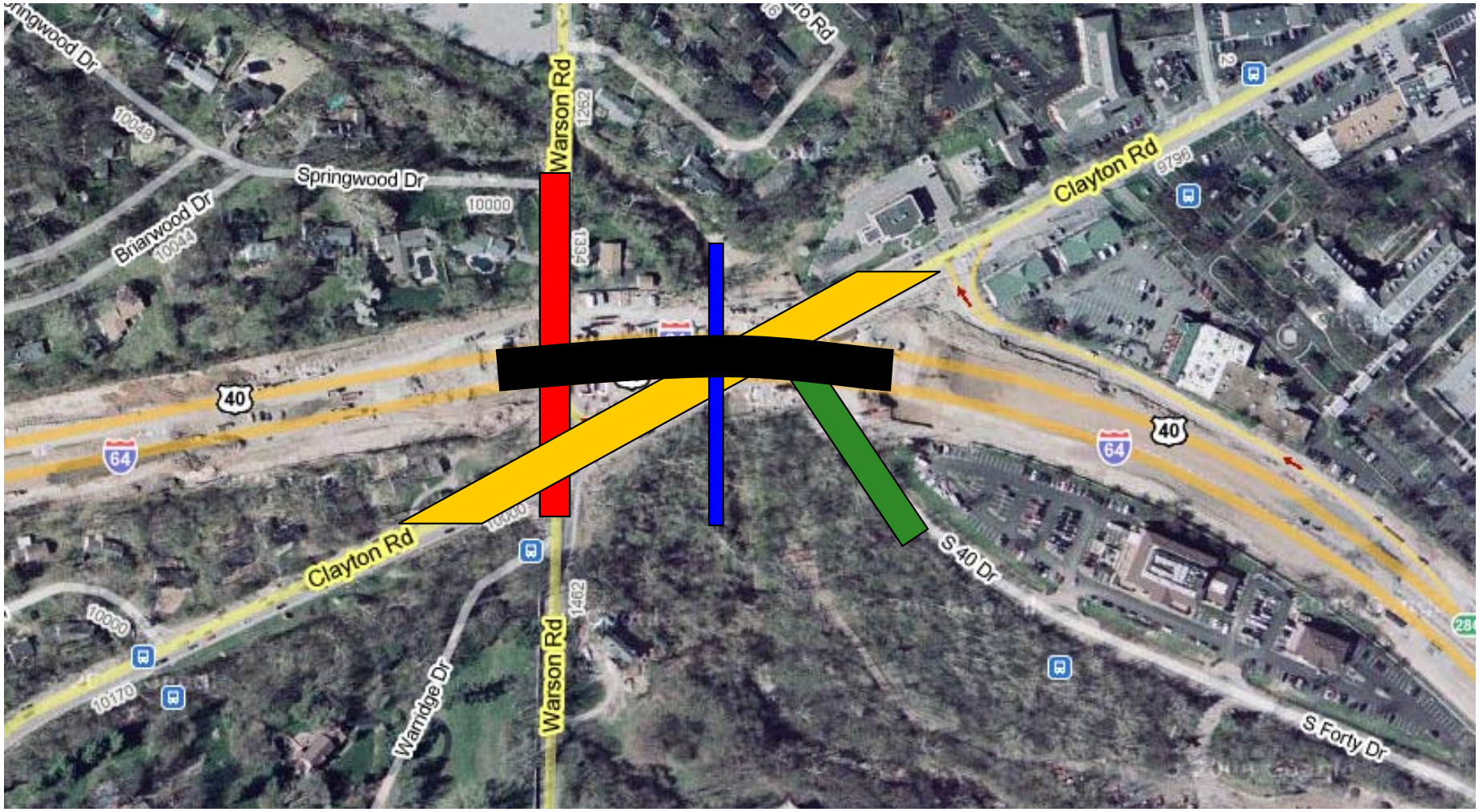

Steel Option

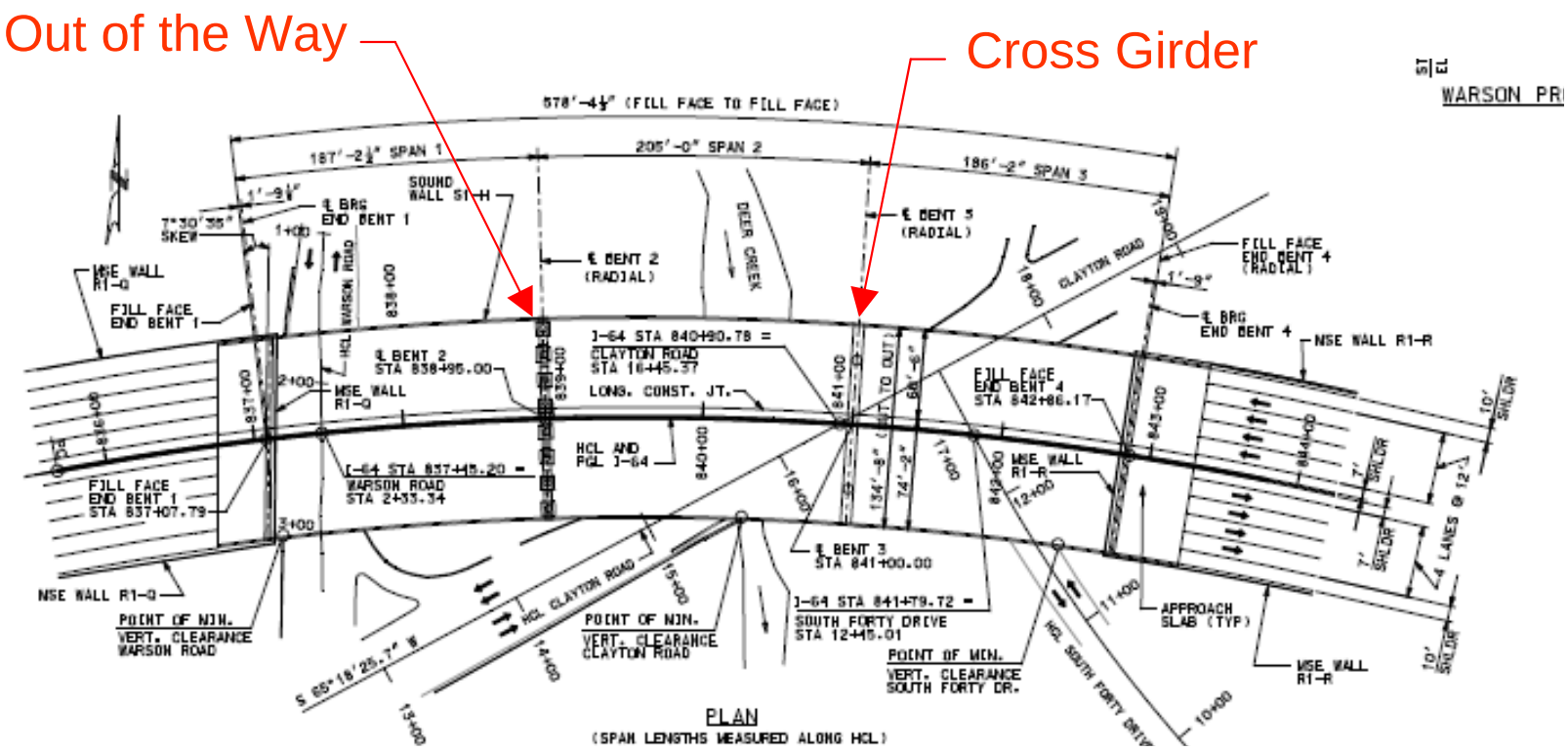

Pre-stressed Concrete Option

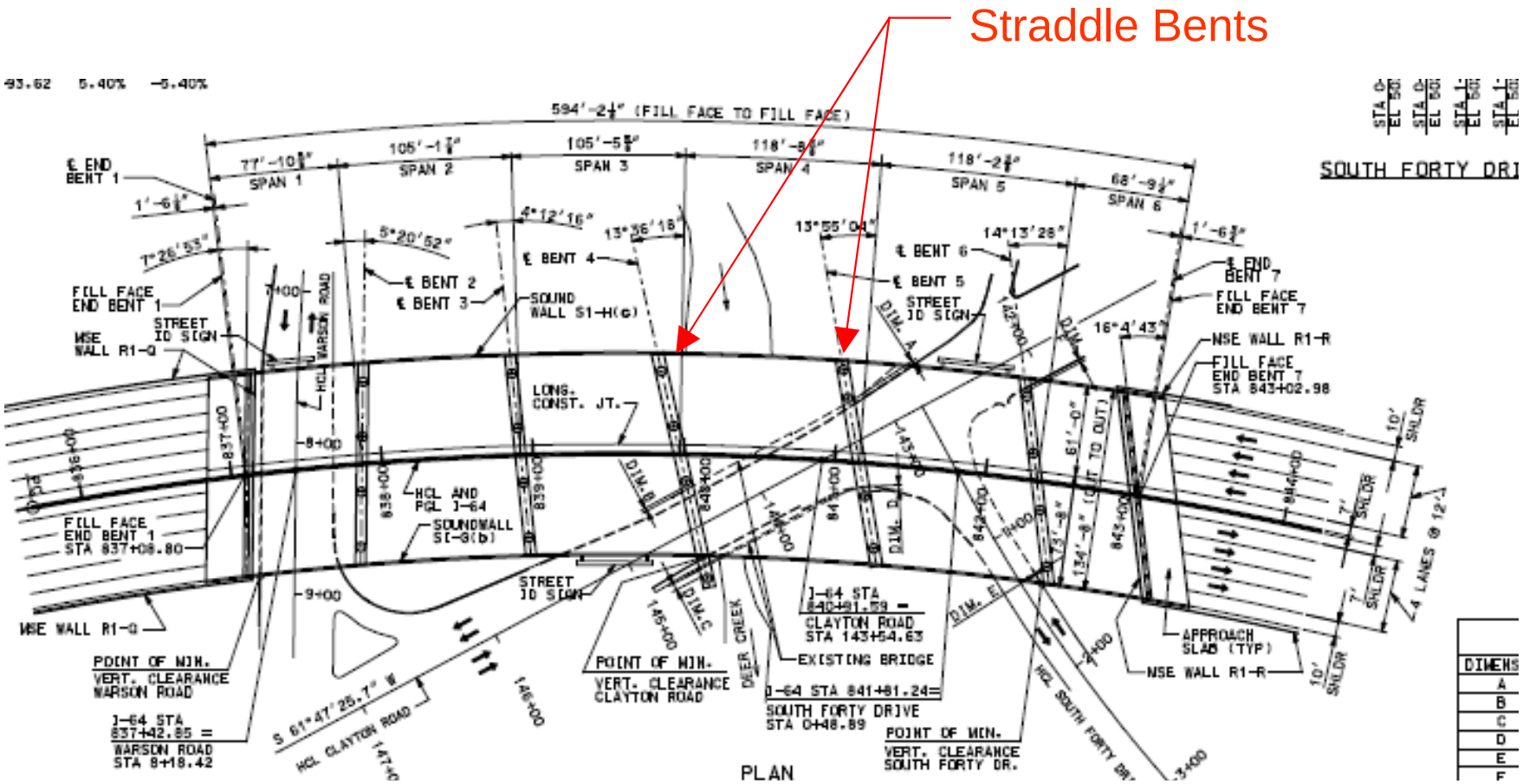

Bridge 3 Cap Pour

Aerial View of Bridge 3 Construction

Straddle Bent 5

Final Pour for Integral Diaphragms

I-64 over Clayton-Warson

Bridge 13, EB I-64 to NB I-170

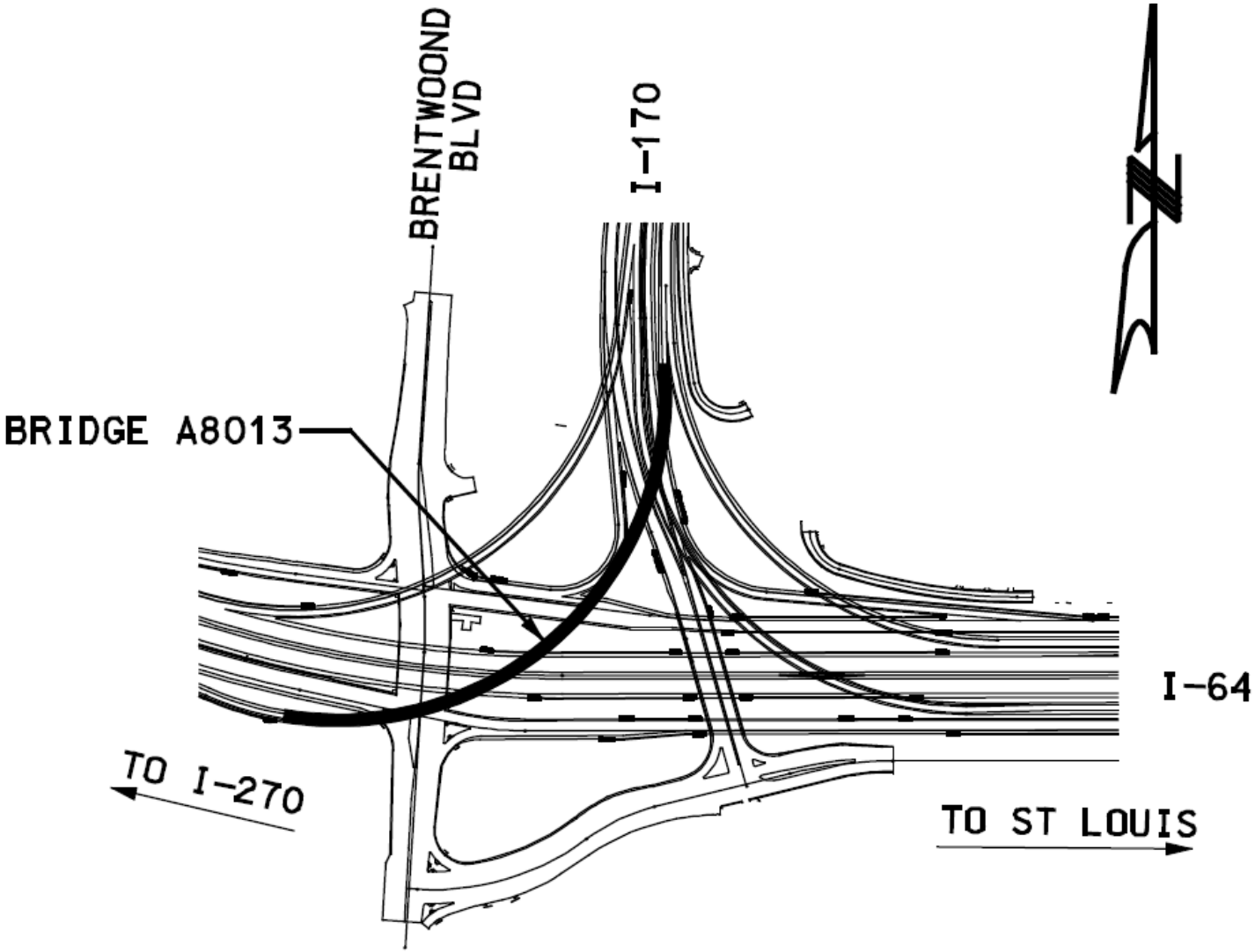

Similar Caps and Columns

As-built Column Sketch

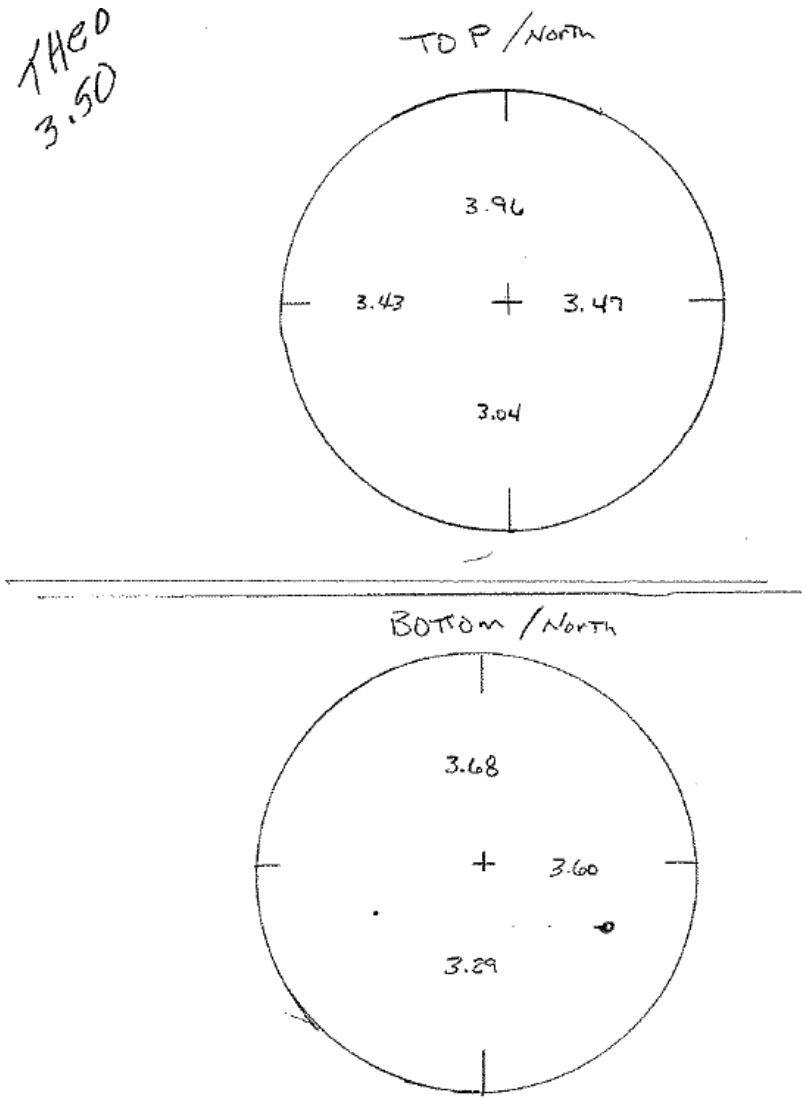

Reusable Steel Cap Forms

RC Pier Input Geometry

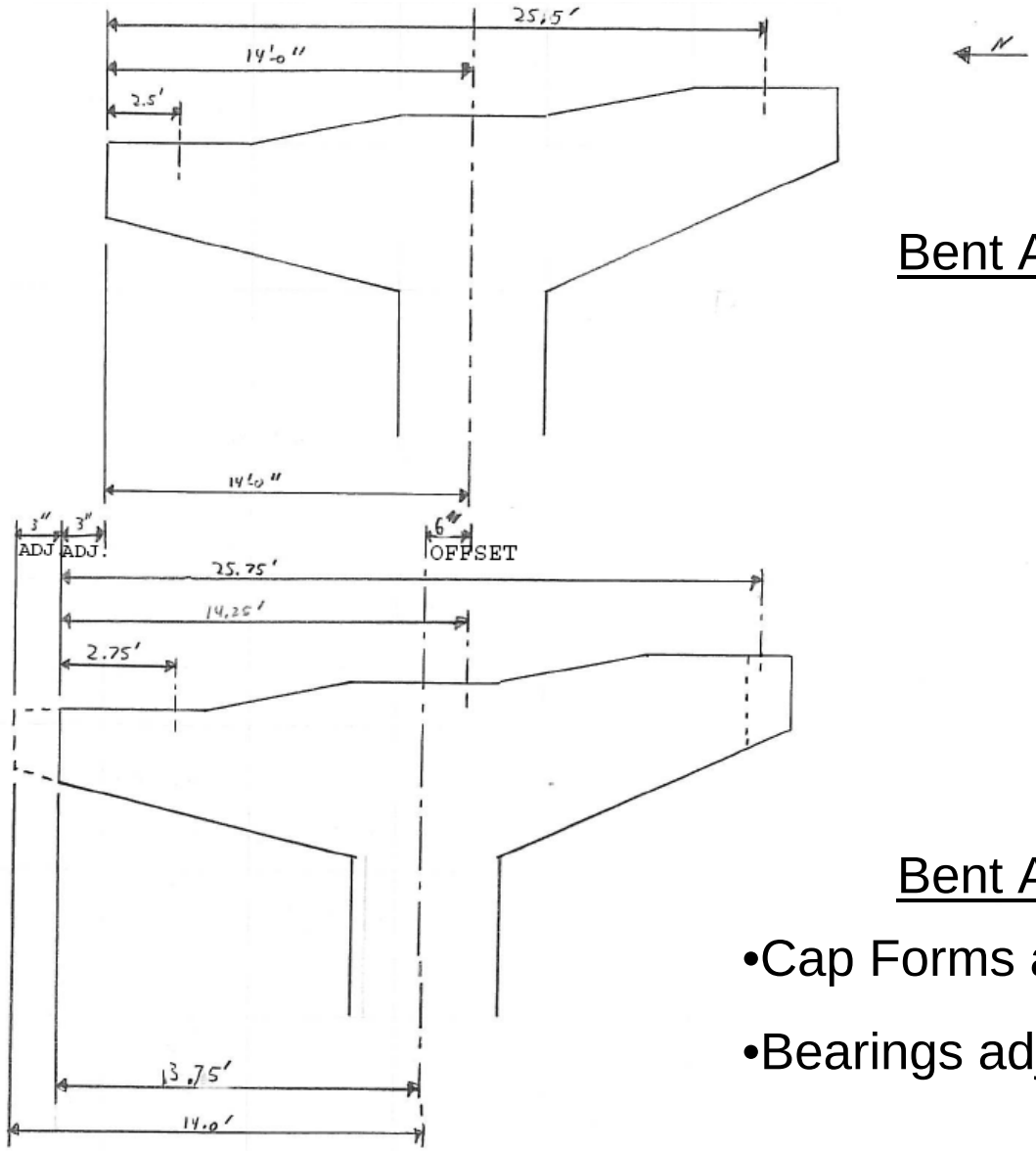

Bent As Designed

Bent As-Built

- Cap Forms adjusted by 3”
- Bearings adjusted by 3”

Bent 2 Analysis Results

- Point of fixity did not change
- Shear loads in column were within allowable
- Cap design was still appropriate
- Column had 3% overstress, but okay

- Adjust Cap forms by 3”
- Adjust Anchor bolt locations by 3”
- Additional U-bars around outside anchor bolts.

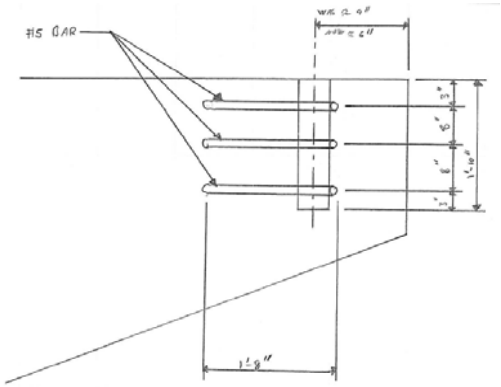

Seismic Category B

Soils consisted of 30’-40’ sand layer over limestone.

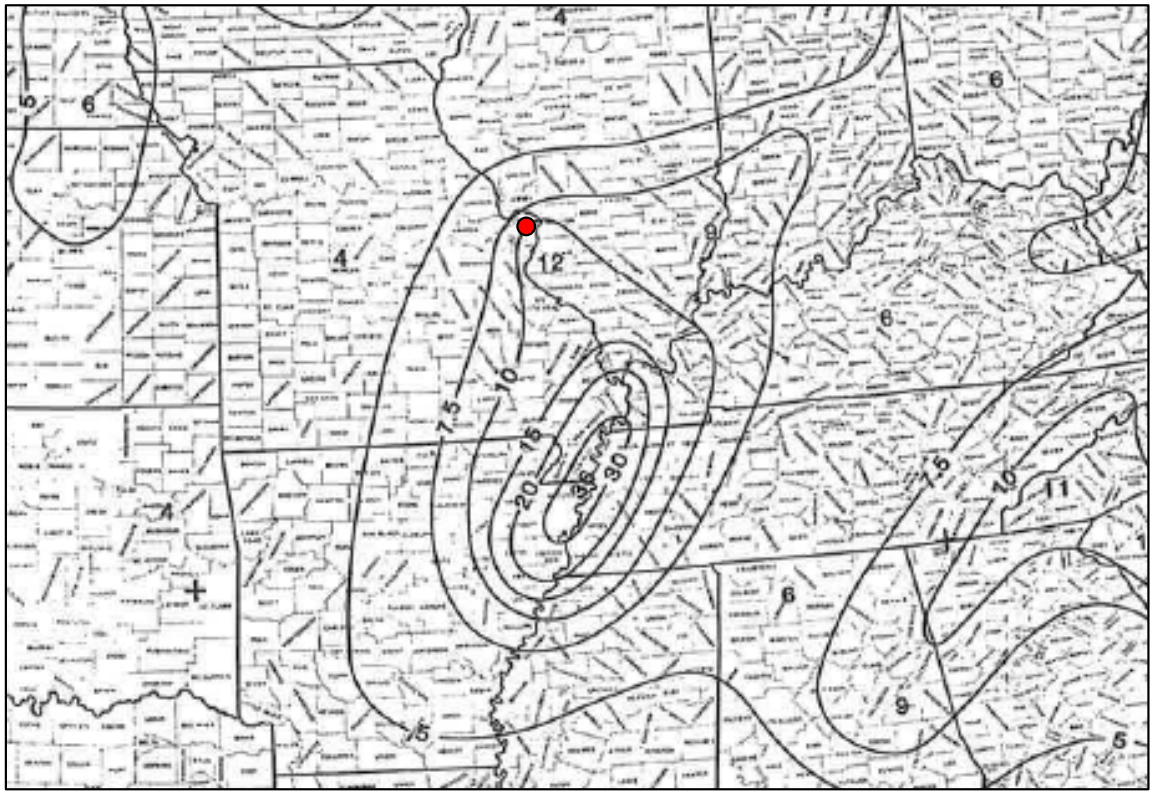

Drilled Shaft Design

- **Method 1 – Equivalent shaft length modeled in RC-PIER to get correct relative stiffness and displacements at the top of shaft.**

- **Method 2 – Lateral and rotational springs were modeled at point of maximum moment to simulate soil structure interaction.**

- **Method 1 was used in production, but versatility of RC-PIER to accommodate multiple methods was a valuable feature.**

Pre-cast Deck Panels

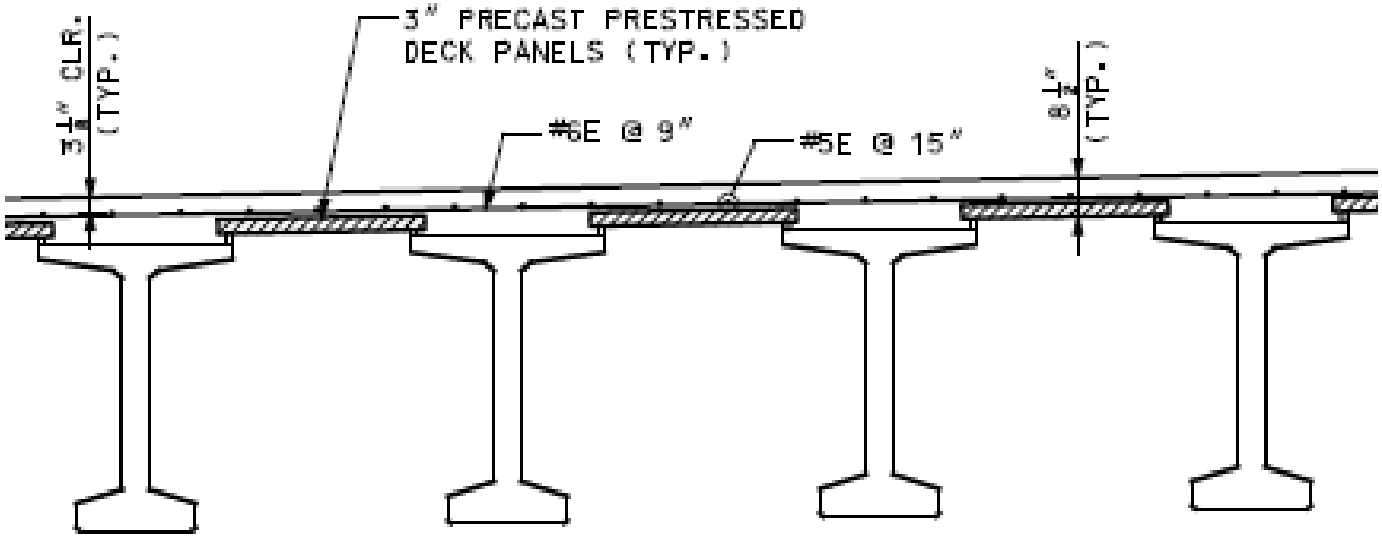

3” pre-cast pre-stressed deck panels with 5 ½” of cast-in-place concrete to achieve an 8 ½” thick deck.

CONSPAN Beam Design

- #1 – 1” reduced deck thickness, Constant 8 ½” thick deck & Future Wearing Surface
- #2 – No future wearing surface, full 8 ½” deck to calculate deflections
- #3 – Constant joint filler = varying deck thickness. Additional dead load was calculated and added into CONSPAN.

Additional Dead Load from Varying Deck

$$w = (A)(0.15 kips/ft.^3)$$

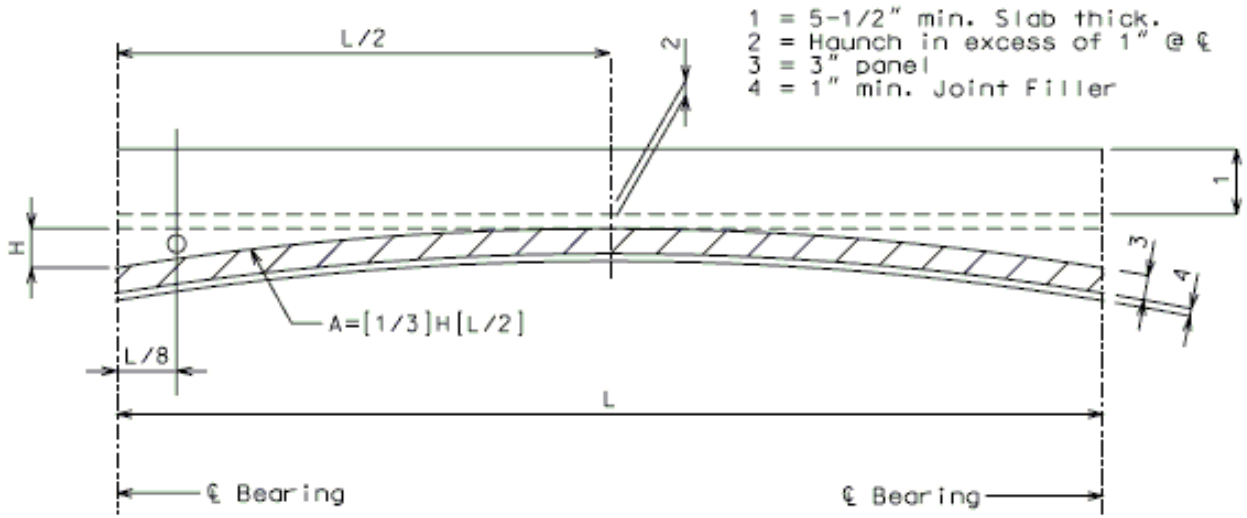

Overpass Bridge Future Widening File

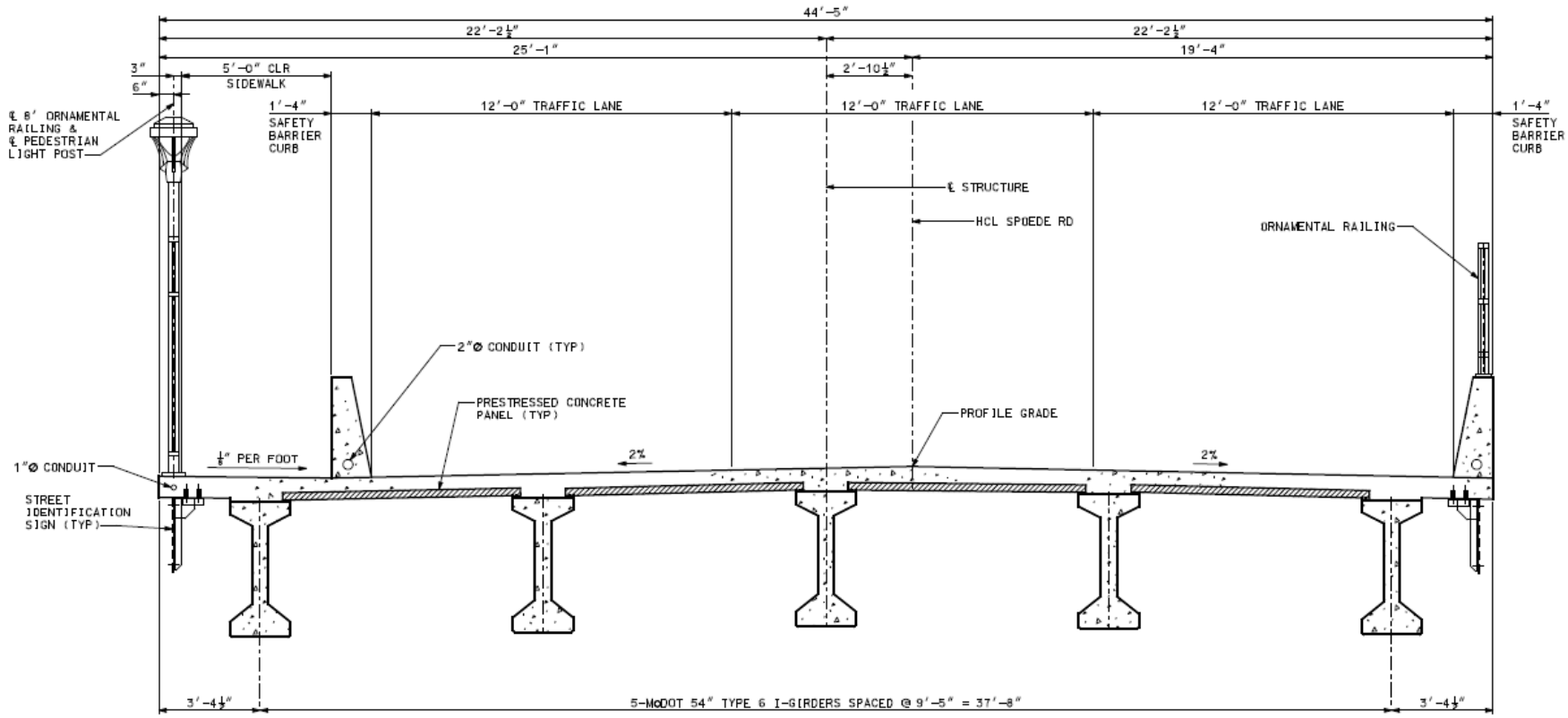

TYPICAL SECTION

MoDOT's Top Flange Step

- Purpose of stepping the top flange is to keep the haunch between 1" and 2".
- A unit dead load was calculated to add into CONSPAN.

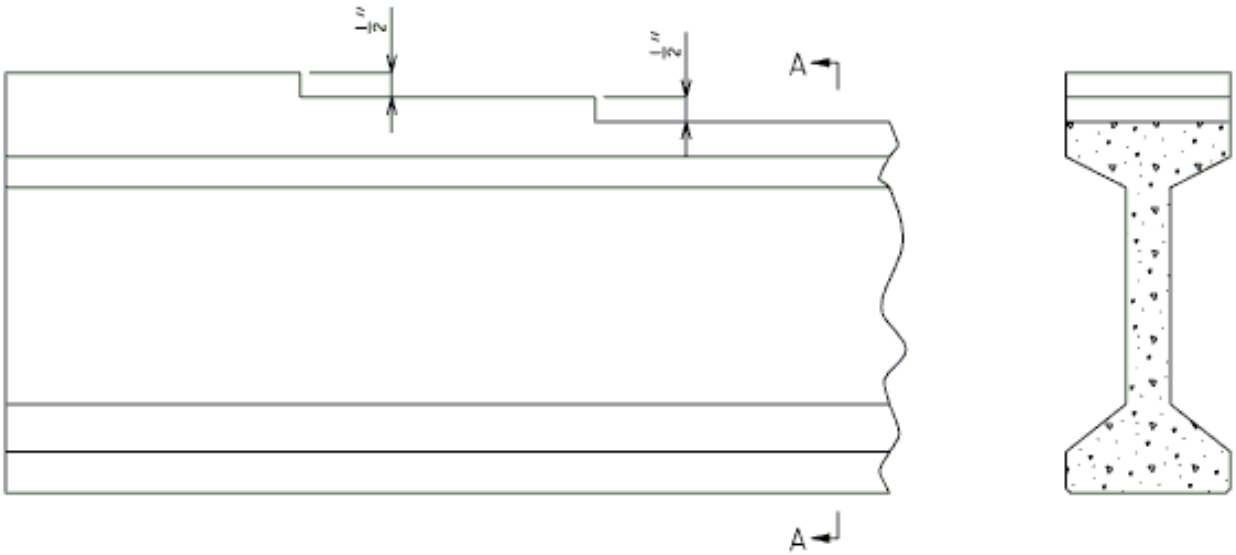

Sloped Top Flange

- **Bridges with superelevation of more than 2% shall be sloped.**

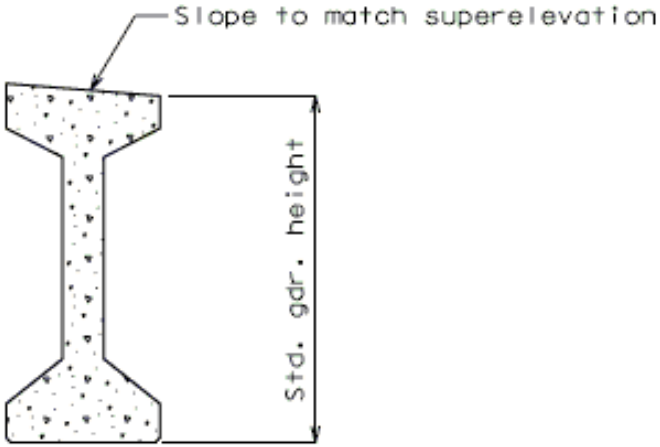

McKnight Ave over I-64

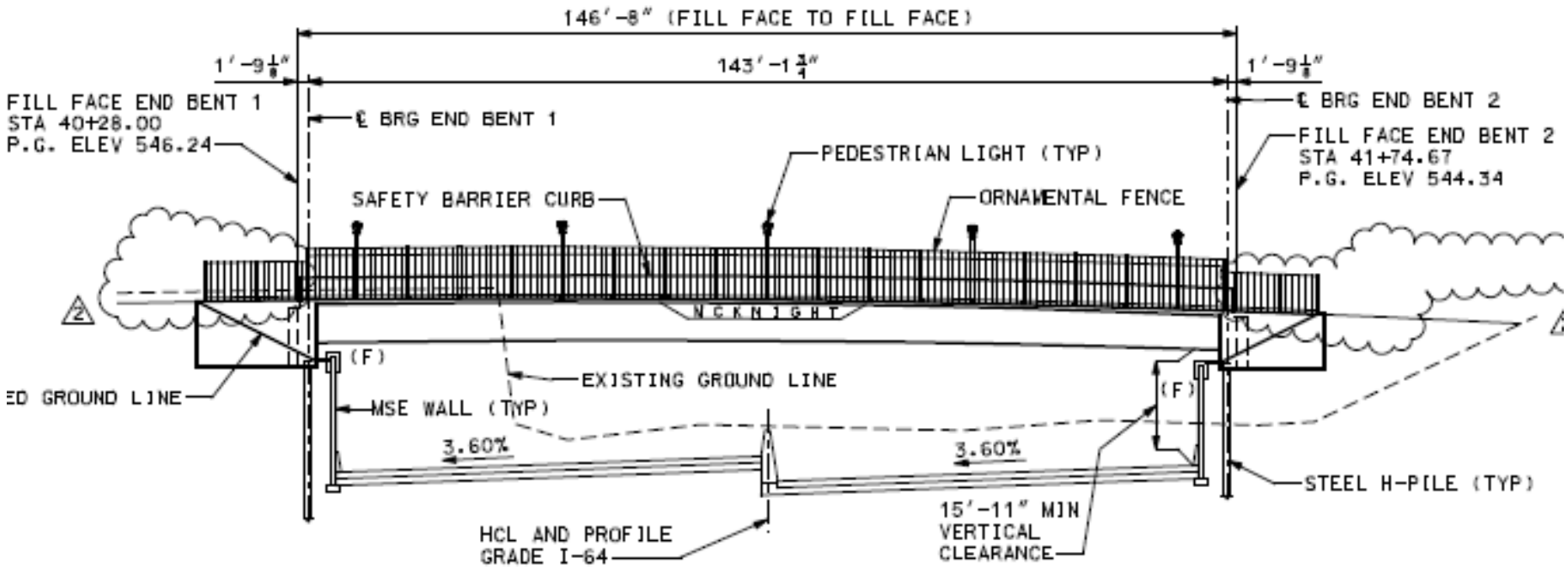

Rear Steerable Transport Trailer Arm

Beam 4 Concrete Spall

Setting Girders at McKnight

Girder 4 Damage

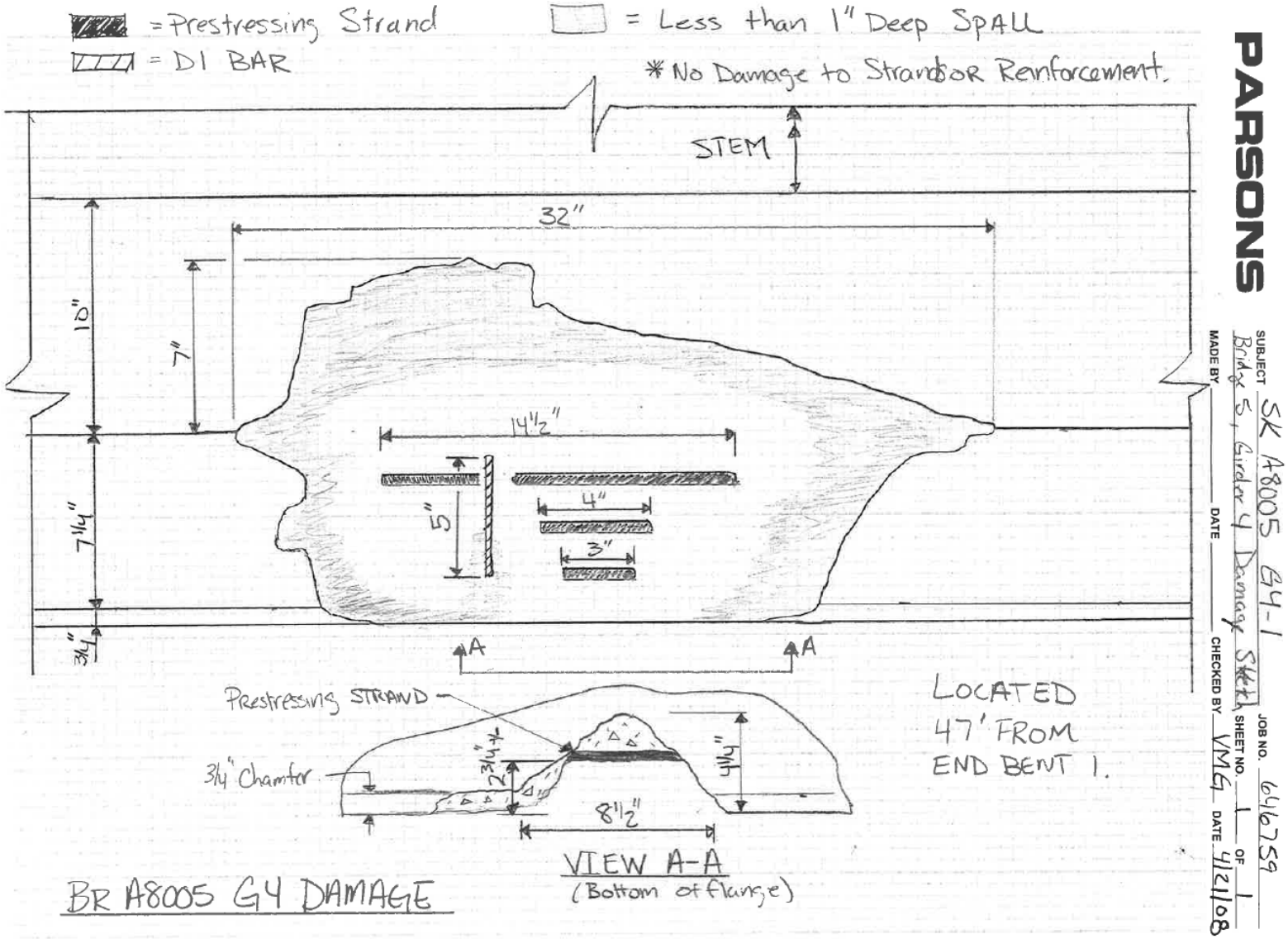

Reduced Beam Section

- Modified original CONSPAN run with reduced beam section for Girder 4 only.
- Cross-section is applied to entire length.
- Self Weight was reduced by 34 lb/ft.
- 3% reduction considered insignificant.

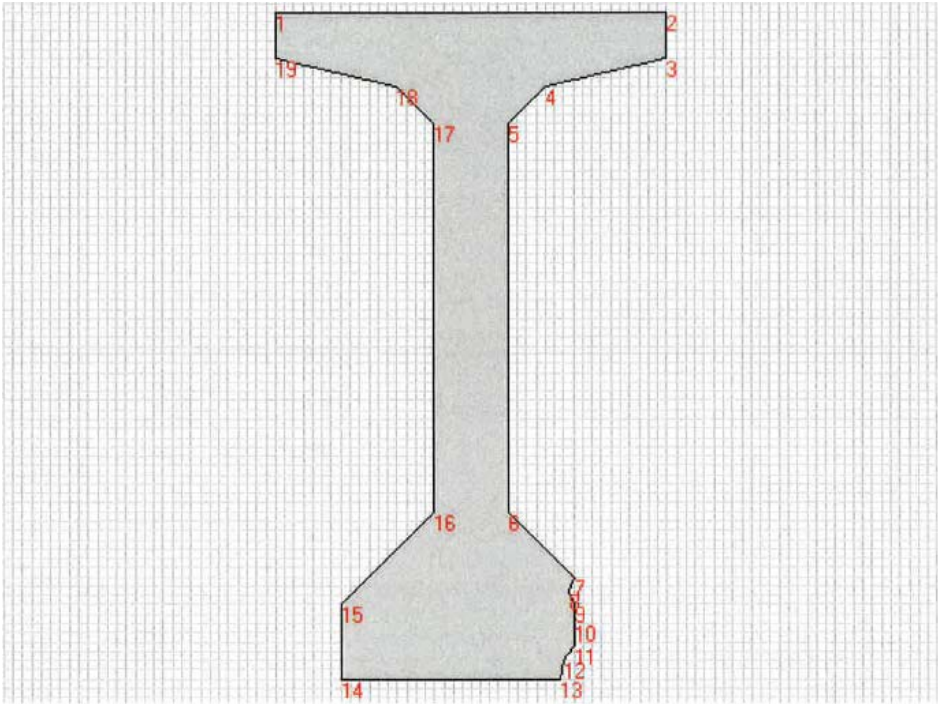

Reduced Section CONSPAN Output

```
DESIGN SUMMARY
--------------
Span:  1,   Beam:  4,   Interior beam
Beam type: I-Girder        , AASHTO-VI (G4-A8005)
Precast Length, ft: 144.58            Release Length, ft: 144.58
Strand Pattern: Straight/Draped       Depress Point: 0.40 L
Strand: 6/10-270K-LL
Strand Type: Low Relaxation
Strand Es, ksi:    28500.0            No. of strands:  46
No. of strands, Draped:   8           No. of strands, Straight:  38
Concrete Strength, f'ci: 6000.0 psi    f'c: 8000.0 psi   f'ct 4000.0 psi
Initial losses:  0.79 %               Final losses: 16.86 %

Specification                           Allowable        Computed        Status
-------------                           ---------        --------        ------
Release Stresses (psi) (Art. 9.15.2.1)
      Precast Top w/ no reinf.          -200.0           -189.5
      Precast Top w/ reinf.             -580.9
      Precast Bot (compression)         3600.0           3863.3*           NG
Factored 1                              Provided         Required
      Ult. Moment (k.ft)                15982.2           13738.6            OK
Debonding Limits                        Allowable        Computed
      Max. Debond per Row                 40.00 %          0.00 %         OK
      Max. Debond Total                   25.00 %          0.00 %         OK
```

Compression stress in the bottom flange exceeded the allowable stress at time of release with reduced section, BUT we knew the beam was intact at that time and could be analyzed with the full section in the original file.

Other States with Repair Specs

- Florida
- Alabama
- New York State
- Colorado

Area Squared to Depth of ½”

¼” Stainless Hex Bolts Epoxied in Place

Repair Area with Final Sealant Applied

Design Quality Management Plan

- **All software has to be validated for each project for the current use versions.**

PARSONS
Design Quality Procedures

Procedure No.: DQP 2.3
Approved: BF

Subject: **QUALITY CONTROL AND VALIDATION OF COMPUTER SOFTWARE**

PURPOSE

To prescribe the method and documentation required before computer software may be used for performing design calculations, or other manipulations for the Project.

SCOPE

The requirements for validation of software apply for all purchased, contracted or locally prepared software, which is to be used for design or calculations, or is to be turned over for client use.

Spoede Road 1946 - 2008

The New I-64 Design Build