TE
5092
.M8A3
no.
69-4

2050

OURI COOPERATIVE HIGHWAY RESEARCH PROGRAM
REPORT 69-4

Property of
MoDOT TRANSPORTATION LIBRARY

"COMPOSITE BRIDGE STRINGERS"

FINAL REPORT

MISSOURI STATE HIGHWAY DEPARTMENT
UNIVERSITY OF MISSOURI - COLUMBIA
BUREAU OF PUBLIC ROADS

LIST OF PREVIOUS REPORTS ON THIS PROJECT

Baldwin, J.W., J.R. Henry, and G.M. Sweeney, "Study of Composite Bridge Stringers Phase II," Missouri Cooperative Highway Research Program Report, 1965

Baldwin, J.W., and K.E. Buttry, "Behavior of Stud Shear Connectors in Lightweight and Normal-Weight Concrete," Missouri Cooperative Highway Research Program Report, 1966

Baldwin, J.W., and Sankar Das, "Shear Connections in Haunched Composite Members," Missouri Cooperative Highway Research Program Report, 68-1, 1968

Dallam, L.N., and Adrian Pauw, "Study of Composite Bridge Stringers-Pushout Tests of Stud and Channel Shear Connectors," Missouri Cooperative Highway Research Program Report, 1963

Dallam, L.N., "Bibliography of Composite Concrete-Steel Beams," Missouri Cooperative Highway Research Program Repost, 68-5, 1968

Dallam, L.N., "Design of Shear Connectors in Composite Concrete-Steel Bridges," Missouri Cooperative Highway Research Program Report, 67-7, 1967

TE
5092
.M8A3
no. 69-4

DEPARTMENT OF
JUN 29 1973

"COMPOSITE BRIDGE STRINGERS"

STUDY 63-2 FINAL REPORT

Prepared for

MISSOURI STATE HIGHWAY DEPARTMENT

by

JAMES W. BALDWIN, JR.
DEPARTMENT OF CIVIL ENGINEERING
UNIVERSITY OF MISSOURI-COLUMBIA
COLUMBIA, MISSOURI

MAY 1970

in cooperation with

U.S. DEPARTMENT OF TRANSPORTATION
FEDERAL HIGHWAY ADMINISTRATION
BUREAU OF PUBLIC ROADS

The opinions, findings, and conclusions expressed in this publication are not necessarily those of the Bureau of Public Roads.

ABSTRACT

The results of an extensive, experimental, and analytical study of concrete-on-steel composite beams is reported. The experimental phase of the study included tests of 75 push-out specimens and 8 composite beams. Both channel and stud shear connectors were studied and the specimens included slabs of both normal-weight and light-weight concrete.

The analytical phase of the study included development of a rational, numerical analysis which accounts for non-linear load-slip characteristics of the shear connection and for both elastic and plastic behavior in the steel beam. Thus, behavior under load can be predicted throughout the entire range from zero load to ultimate load.

Consideration was also given to the behavior of shear connectors in haunced slabs. The final summary includes design recommendations.

TABLE OF CONTENTS

Chapter		Page
I	INTRODUCTION	1
	1.1 Historical Review	1
	1.2 Scope	3
II	BEHAVIOR OF SHEAR CONNECTOR	5
	2.1 Pushout Tests	5
	2.2 Shear Connector Strength	5
	2.3 Load Slip Relationship	18
	2.4 Shear Connectors in Haunches	19
III	BEHAVIOR OF BEAMS	33
	3.1 Numerical Analysis	33
	3.2 Beam Tests	34
IV	A COMPARISON WITH CURRENT PRACTICE	48
V	SUMMARY AND CONCLUSIONS	58
BIBLIOGRAPHY		61

COMPOSITE BRIDGE STRINGERS

Final Report

Chapter I

INTRODUCTION

1.1 Historical Review

Although the concept of composite design is not a new one, the wide-spread use of this technique in bridge construction is largely a result of developments of the past fifteen years. Research studies to investigate the behavior of composite beams were underway as early as 1921 (1)*, and by the late 1930's, composite beam design was beginning to appear in construction (2). Early composite designs employed a variety or types of mechanical shear connectors such as welded "shear lugs" or sheared prongs bent upward out of the top flange of the steel section so as to project into the slab. Bond was also utilized, sometimes in combination with mechanical shear connectors (3).

Many of the early attempts to use composite design met with unfavorable responses for several reasons. There were few, if any, design criteria available. Composite designs were often more expensive than similar non-composite designs due to the nature and cost of the shear connection. The greatest opposition, however, stemmed from the fact that there were no governing specifications.

The American Association of State Highway Officials (AASHO) relieved this situation somewhat by including a

---

*Numbers in parentheses refer to entries in the bibliography.

section on composite design in the 1944 Specifications (4). These specifications merely outlined principles and left the method and application to the discretion of the designer.

The period following the publication of these specifications was marked by a fairly general acceptance of composite design as evidenced by a questionaire sent out by Professor Ardis White (5) in 1956. The questionaire was sent to all state highway departments and to many foreign countries inquiring as to their use or proposed use of composite design. The results showed that over half of the states were already using the method and that only one agency opposed the use of composite construction.

Publication of these 1944 Specifications also stimulated an increase in research so that soon it became necessary, and possible, to broaden the scope of the specifications. Viest, Fountain, and Siess (6) in conjunction with the Committee of Bridges and Structures of AASHO, evaluated the research and formulated some recommended changes in the specifications. The final version (7) was adopted in 1957.

Composite design took a big step forward with the advent of the shear stud. This afforded a rapid and relatively inexpensive method of achieving the desired connection both in the shop and in the field. Research studies (8) have shown that studs can provide an adequate degree of interaction. Studs made their debut in highway bridges in 1956 with the construction of a bridge in Fort Pierre, S.D. (9).

As a result of these advances there has been a recent trend toward the use of composite design because of increased economy. Recent studies have shown one-fourth to one-third savings in steel using composite design over conventional design (9) (10) (11) (12). Savings of this magnitude seem to justify and encourage the ever increasing use of composite construction.

1.2 Scope

In spite of the great amount of research that has been conducted there is still much to be learned about the actual behavior of composite beams and the distribution of forces within the beam under load. In an attempt to learn more about the analysis, design and behavior of these members, the Civil Engineering Department of the University of Missouri undertook an extensive analytical and experimental research program. The program began in 1962 with a literature survey which was followed by three general phases of new investigation. A bibliography resulting from the literature survey was presented in Missouri Cooperative Highway Research Report 68-5 (18). Phase one was a study of shear connector behavior and included tests of 75 push-out specimens. From these data, equations for predicting both the ultimate strength and the load slip characteristics of the shear connectors were developed.

Phase two consisted of a rather complete analysis of the behavior and distribution of forces within a composite beam plus laboratory tests of eight prototype composite

beams. These test results were used to verify the analysis. Only a summary of phases one and two are reported herein. However, details of phase one are reported in references 14 and 15 and details of phase two are reported in references 16 and 17.

Phase three is a formulation of design recommendations based on a detailed analysis of the internal force distributions in several typical bridge beams. These force distributions were found through the application of the analysis developed in phase two.

Chapter II

BEHAVIOR OF SHEAR CONNECTORS

Since the load-deflection behavior of a composite beam is directly dependent upon the load-slip relationship of the shear connectors, it was necessary to develop an algebraic expression for this relationship before a rational analysis of the beam could be developed. Several attempts were made to develop this expression analytically but none were successful. As a result, it was necessary to develop an empirical expression from experimental observations.

2.1 Pushout Tests

A series of 51 pushout specimens, Figure 1, were tested to determine the behavior of welded studs in a solid rectangular slab. Major variables were length of stud, diameter of stud, type of concrete (i.e. lightweight or normal-weight), and strength of concrete. Details of these specimens, the ultimate loads obtained, and the modes of failure are presented in Table I. Table II gives the results of tension tests on the shear connector material. Photographs of typical failure modes are shown in Figures 2-4. In addition to the pushouts with stud shear connectors, 10 pushout specimens with channel shear connectors were tested. Properties of the specimens and the test results are shown in Table III.

2.2 Shear Connector Strength

From observations of the failure modes it was reasoned

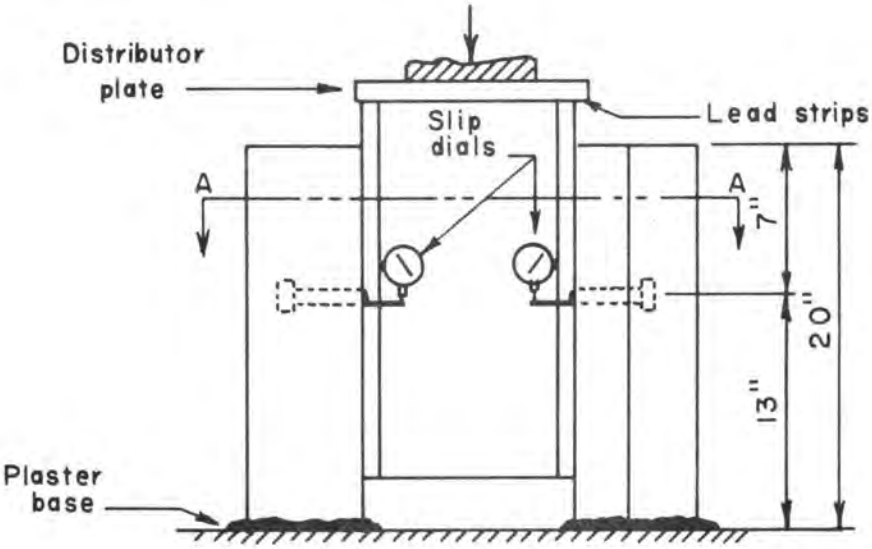

ELEVATION

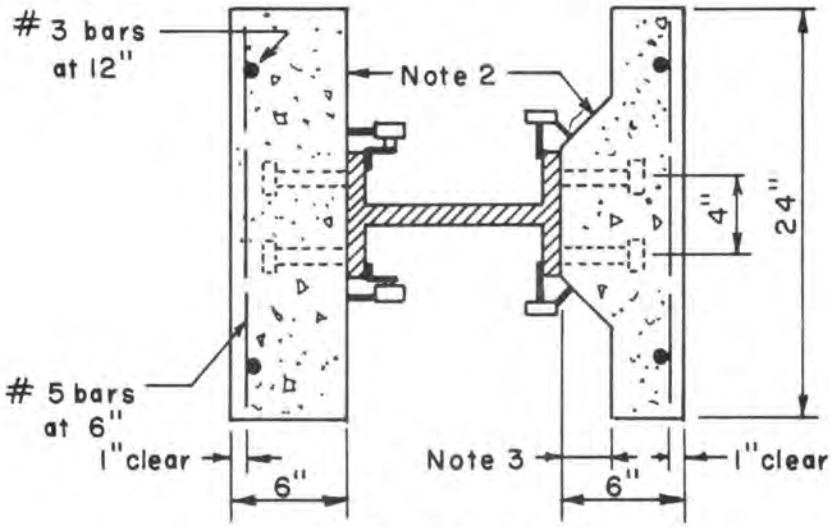

Section A-A

NOTES

1 - All beams were 8WF 48.
2 - Same on both sides, either rectangular or haunched.
3 - Haunches were either 1.5" or 3".

FIGURE 1 DETAILS OF PUSHOUT

Table 1

PROPERTIES OF PUSHOUTS

SPECIMEN	STUD DIAMETER (INCHES)	STUD LENGTH (INCHES)	CONCRETE STRENGTH (KSI)	SLAB THICKNESS (INCHES)	ELASTIC MODULUS (KSI)	ULTIMATE LOAD (KIPS)	SLIP AT FAILURE (INCHES)	MODE OF FAILURE
N4B4A4	.500	4.0	6.00	6	4510.	12.2	.159	STUD
N4B4B4	.500	4.0	6.55	6	4120.	10.8	.081	STUD
N4B4C4	.500	4.0	6.55	6	4120.	13.0	.165	STUD
L4B4A4	.500	4.0	5.52	6		8.6		STUD
L4B4B4	.500	4.0	5.05	6	2030.	10.7		STUD
L4B4C4	.500	4.0	4.94	6	2180.	11.6		STUD
L4B4D4	.500	4.0	7.74	6	2330.	13.1		STUD
L4B4E4	.500	4.0	8.08	6	2640.	12.4		STUD
L4B4F4	.500	4.0	8.08	6	2640.	12.4		STUD
N5B4A4	.625	4.0	6.00	6	4510.	19.2	.173	STUD
N5B4B4	.625	4.0	5.60	6	4080.	17.7	.163	STUD
N5B4C4	.625	4.0	5.60	5	4080.	18.7	.158	STUD
L5B4A4	.625	4.0	5.52	6		15.0	.080	STUD
L5B4B4	.625	4.0	5.52	6		18.7		STUD
L5B4C4	.625	4.0	4.94	6	2180.	16.2		CONCRETE
L5B4D4	.625	4.0	4.72	6	2160.	16.5	.268	CONCRETE
L5B4E2.5	.625	2.5	3.00	6	1960.	14.7	.269	CONCRETE
L5B4F2.5	.625	2.5	3.00	5	1960.	15.6	.314	CONCRETE
N6B4A4	.750	4.0	5.86	6	4880.	29.4	.141	CONCRETE
L6B4A4	.750	4.0	5.05	6	2070.	19.3		WELD
L6B4B4	.750	4.0	4.76	6	2480.	16.3		WELD
L6B4C4	.750	4.0	5.14	6	2070.	17.5	.060	WELD
L6B4D4	.750	4.0	5.26	6	2150.	22.5		CONCRETE
L6B4E4	.750	4.0	5.26	6	2150.	23.6		CONCRETE
N7B4A4	.875	4.0	5.86	6	4880.	30.0	.095	CONCRETE
L7B4A4	.875	4.0	5.14	6	2070.	27.8	.148	CONCRETE
L7B4B4	.875	4.0	6.11	6	2320.	25.0		CONCRETE
L7B4C4	.875	4.0	4.36	6	2300.	24.8	.108	CONCRETE
L7B4D4	.875	4.0	4.36	6	2300.	26.7	.315	CONCRETE
L7B4E4	.875	4.0	4.36	6	2300.	25.2	.147	CONCRETE
L7B4F4	.875	4.0	4.19	6	2750.	27.8	.363	CONCRETE
L7B4G4	.875	4.0	4.19	5	2750.	27.8	.186	CONCRETE

SPECIMEN	STUD DIAMETER (INCHES)	STUD LENGTH (INCHES)	CONCRETE STRENGTH (KSI)	SLAB THICKNESS (INCHES)	ELASTIC MODULUS (KSI)	ULTIMATE LOAD (KIPS)	SLIP AT FAILURE (INCHES)	MODE OF FAILURE
N4B4A2	.500	2.0	3.91	6	3600.	11.2	.167	STUD
N4B4B2	.500	2.0	5.21	6	4140.	12.5	.175	STUD
N4B4A3	.500	3.0	4.13	6	4120.	12.8	.170	STUD
N4B4D4	.500	4.0	4.30	6	3910.	11.1		STUD
L4B4A2	.500	2.0	4.27	6	1900.	9.2	.316	STUD
L4B4B2	.500	2.0	4.59	6	2040.	8.1	.147	WELD
L4B4A3	.500	3.0	3.08	6	1780.	13.8	.480	CONCRETE
L4B4G4	.500	4.0	3.04	6	1690.	10.7		STUD
N5B4D4	.625	4.0	3.57	6	3540.	17.5	.284	STUD
L5B4G4	.625	4.0	3.53	6	1810.	13.2		CONCRETE
L5B4H2.5	.625	2.5	4.03	6	1850.	14.1		CONCRETE
N6B4A2	.750	2.0	5.65	6	4100.	19.3	.179	PULL-OUT
N6B4A3	.750	3.0	3.29	6	3140.	22.0	.132	CONCRETE
N6B4B3	.750	3.0	6.23	6	4140.	24.2	.117	CONCRETE
N6B4B4	.750	4.0	3.42	6	3330.	21.1		CONCRETE
L6B4A2	.750	2.0	4.60	6	1775.	12.9	.285	PULL-OUT
L6B4A3	.750	3.0	3.57	6	1870.	16.4		CONCRETE
L6B4B3	.750	3.0	5.05	6	1980.	17.2		CONCRETE
L6B4H4	.750	4.0	3.75	6	1790.	17.4		CONCRETE
N5H4B2.5	.625	2.5	4.56	6*	3830.	14.6	.112	PULL-OUT
L5H4A2.5	.625	2.5	3.44	6*	1825.	11.7	.379	PULL-OUT
N6H4A4	.750	4.0	4.19	6*	3970.	20.8	.146	CONCRETE
N6H4B4	.750	4.0	4.54	6**	3770.	22.5	.250	CONCRETE
L6H4A4	.750	4.0	3.92	6*	1590.	15.6	.213	CONCRETE
L6H4B4	.750	4.0	4.19	6**	1880.	17.5	.205	CONCRETE

* 3.0 Inch Haunch

** 1.5 Inch Haunch

TABLE II

RESULTS OF STUD TENSION TESTS

Diameter (inches)	Length (inches)	No. tested	Yield Stress (psi)	Ultimate Stress (psi)
1/2	2	3	66,000	75,500
1/2	3	3	59,300	67,800
1/2	4	4	66,800	78,300
5/8	4	3	51,800	64,200
3/4	3	3	53,600	62,100
3/4	4	3	50,500	59,000

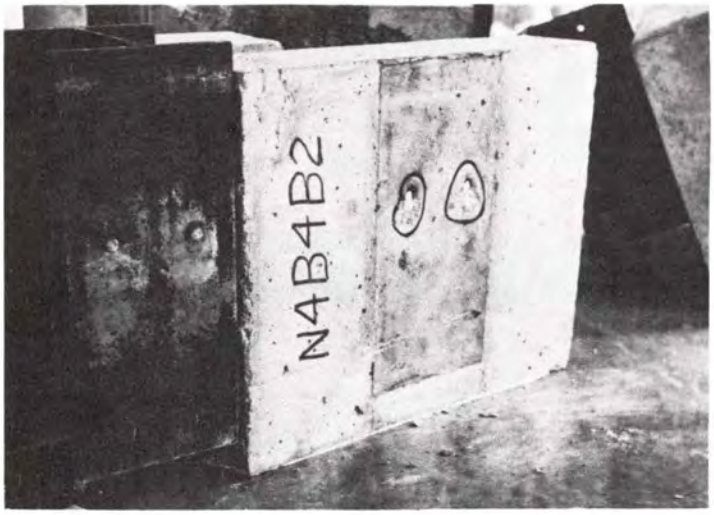

FIGURE 2 TYPICAL STUD SHEAR FAILURE

FIGURE 3 TYPICAL CONCRETE FAILURE

FIGURE 4 CRACKING PATTERNS

TABLE III

PROPERTIES OF CHANNEL PUSHOUTS

SPECIMEN	LENGTH OF 4-in. x 5.4-lb. Channel In.	f_c' psi	SLAB THICKNESS in.	Ult. Load Per Channel KIPS	SLIP AT FAILURE in.
N4BC4	4.0	5730	6.0	6.2	.058
N4BC6	6.0	5730	6.0	97.5	.083
L4BC4	4.0	4810	6.0	60.3	.111
L4BC6	6.0	3980	6.0	69.5	.079
N4BC4b	4.0	6770	6.0	74.8	.133
N4BC4c	4.0	6770	6.0	66.8	.173
N4BC4d	4.0	7840	6.0	72.0	.142
N4BC4e	4.0	7840	6.0	84.8	.203
L4BC4b	4.0	6220	6.0	58.4	.160
L4BC4C	4.0	6220	6.0	62.0	.198

that the shear connector strength is probably not a function of concrete strength alone as is implied by the current formulas appearing in design codes. In cases where the failure is by destruction of the slab, one would expect the strength to be a function of concrete strength but in cases where the failure is by shearing of the studs, it seems that the shear connector strength must be governed by the strength of the steel in the studs. From this reasoning and the data obtained from these pushout tests, the following equations for ultimate shear-connector strength were developed:

For shear of the studs

$$Q_u = \frac{\pi D^2}{4} f'_s \tag{1}$$

where Q_u is the ultimate capacity, D is the diameter of the stud, and f'_s is the shear strength of the steel at the plane of failure. An average value of 60,000 psi for f'_s was found for the studs used in this investigation.

For destruction of the concrete slab

$$Q_u = 0.0157LDf'_{sp} + 6.80 \tag{2}$$

where Q_u is the failure load in kips, L and D are in inches and f'_{sp} is in psi.

The equation

$$f'_{sp} = 6\sqrt{f'_c} \tag{3}$$

where f'_c is the compressive strength of the concrete in psi, was used to estimate the tensile strength of the

normal-weight concrete, and the tensile strength of the lightweight concrete was taken to be

$$f'_{sp} = 4.8 \sqrt{f_c'} \qquad (4)$$

The value of Q_u in equation 1 may be interpreted as the shear force necessary to shear the stud while the value of Q_u in equation 2 may be interpreted as the shear force necessary to split the slab. The predicted strength of the shear connection then is the smaller of these two values and the mode of failure is predicted by the equation which governs. Interaction of these two equations is shown graphically in Figure 5. From this graph it may be seen that the strength of 1/2-inch diameter studs is nearly always governed by shear strength of the stud while the shear connector strength for 7/8-inch diameter studs is nearly always governed by the strength of the slab. The mode of failure for 5/8-inch and 3/4-inch diameter studs is determined by the relative values of f'_s, f'_{sp}, and L. Also shown is a comparison with the ultimate strength formula which appears in the 1969 AASHO Code.

Equations 1 and 2 were applied to each of the test specimens and a comparison of the predicted and experimental failure loads is shown in Figure 6. With the exception of one specimen the predicted capacity was within ± 20% of the actual failure load and in only three specimens was the predicted mode of failure in error.

In one case a 7/8-inch in diameter stud tore a hole in the 3/8-inch beam flange. This suggests a third of failure

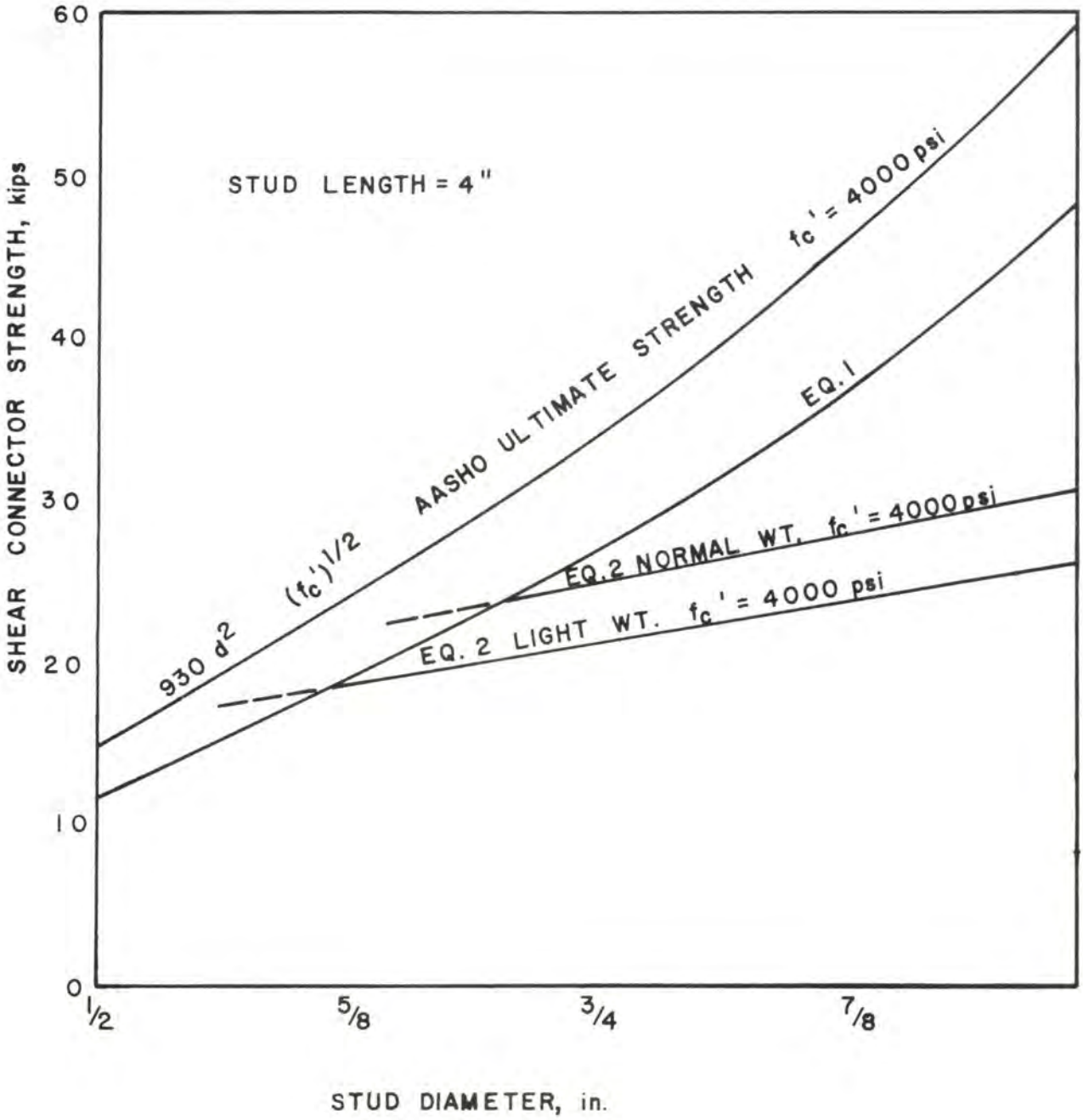

FIGURE 5 SHEAR CONNECTOR CAPACITY

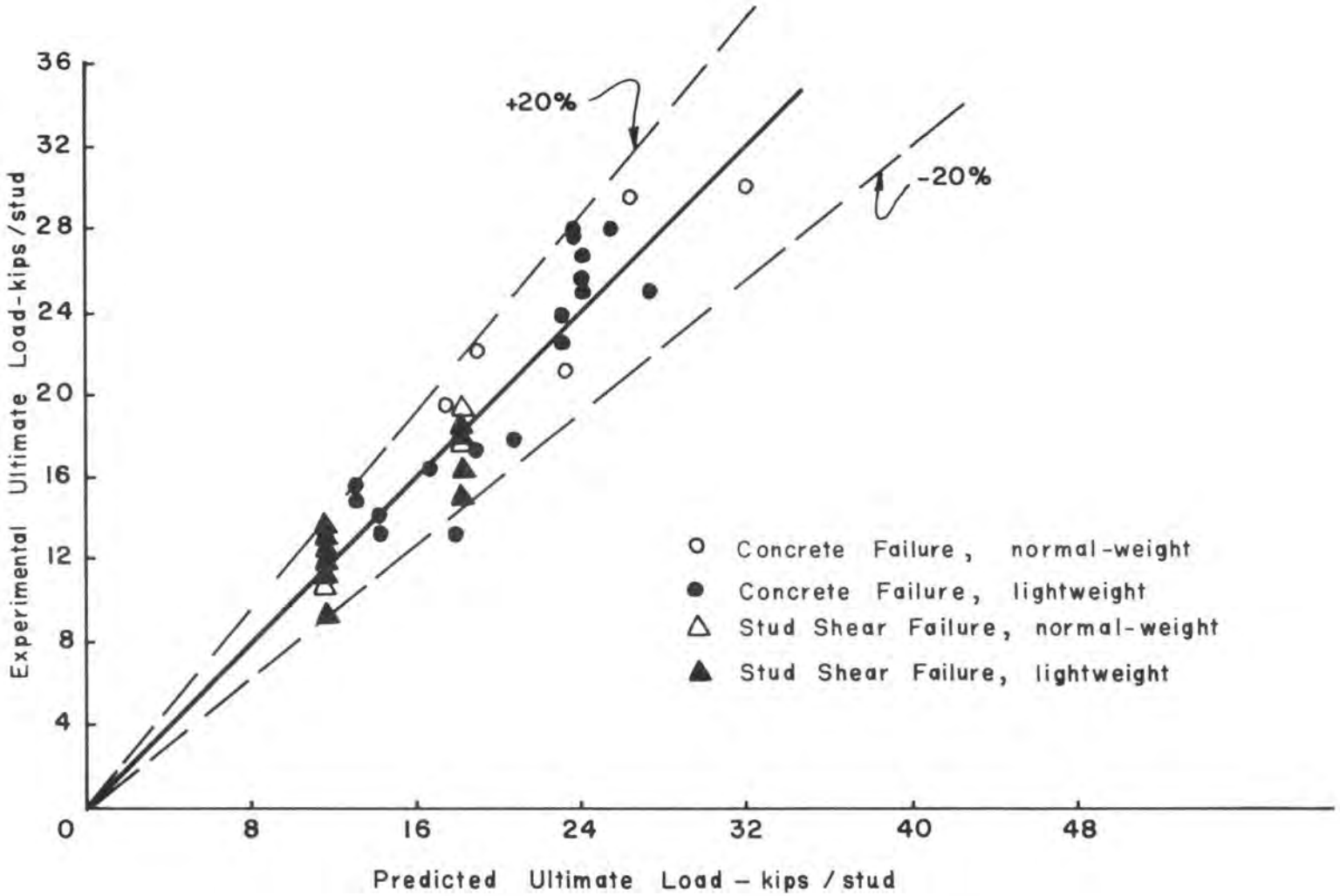

FIGURE 6 FAILURE LOAD VS PREDICTED CAPACITY

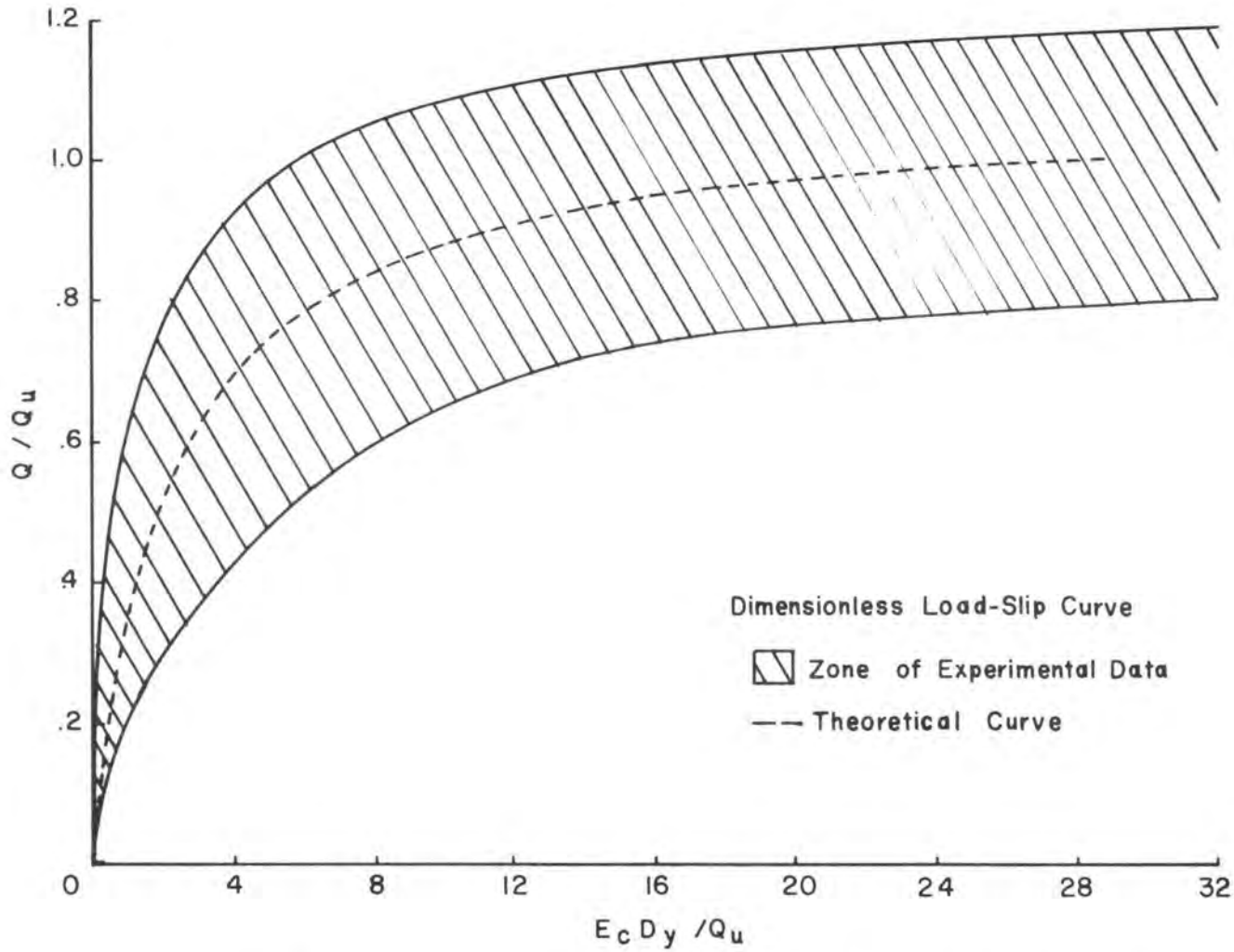

FIGURE 7 DIMENSIONLESS COMPARISON OF LOAD-SLIP RELATIONSHIP

is possible in very thin flanges. However, this failure mode was not investigated further.

2.3 Load-Slip Relationship

In predicting the behavior of a composite beam it is necessary to know the load-slip characteristics of the shear connection as well as its ultimate strength. Load-slip data from all the stud pushout tests were examined and the following empirical equation for the load-slip relationship was developed:

$$Q = \frac{0.5E_c D\gamma}{1 + (0.465E_c D\gamma)/Q_u} \qquad (5)$$

where Q is the shear force on the connector,
γ is the slip between the concrete slab and steel beam
E_c is the modulus of elasticity of the concrete,
D is the diameter of the stud, and
Q_u is the ultimate strength of the shear connector as determined from equation 1 or 2.

Figure 7 is a normalized plot which shows a comparison of equation 5 with the range of experimental data from 51 pushout specimens. This plot shows approximately the same plus or minus 20 percent scatter in the load-slip curves as was observed in the ultimate strength values.

Although it would be more desirable if there was less scatter in the data, an equation for the behavior of an "average" shear connector is quite useful in predicting the behavior of a beam which in itself is governed by the average behavior of perhaps 50 or more shear connectors.

It should be noted that, in the working load range, the stiffness of the shear connection is almost directly proportional to the modulus of elasticity of the concrete. This may be a significant factor in composite beams with lightweight concrete slabs.

2.4 Shear Connectors in Haunches

Results of beam tests which were being conducted simultaneously with the pushout study indicated that shear connectors might have lower strengths when used in beams with haunched slabs. To investigate this phenomenon further a series of six haunched pushout specimens, Figure 8, was added to the original series of pushout tests. Details of these specimens and results of the tests are shown in able 1. These pilot pushout tests indicated that, indeed, the strength of shear connectors imbedded in haunches might be reduced as much as 25 percent.

Further study of this problem indicated that the development of equations to predict the strength of shear connectors in haunches was extremely difficult. It had previously been decided that the strength of shear connectors in solid slabs could be determined only on an empirical basis and the introduction of a haunch added four new variables to the problem. These variables were: width at bottom of the haunch, width at the top of the haunch, height of haunch, and ratio of the length of stud to the height of haunch.

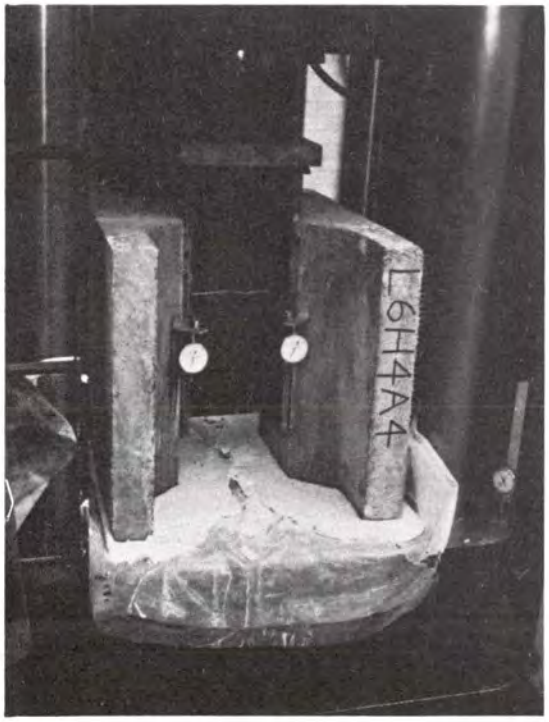

FIGURE 8 PUSHOUT READY FOR TEST

A very large number of specimens would be required to develop an empirical relation including these four variables in addition to the variables governing the strength of shear connectors in a solid slab. In order to provide some guidelines for design lower and upper bounds to the strength of shear connectors in haunches were sought. It was reasoned that the strength of shear connectors in a narrow solid slab with a width just equal to the width of a haunch must be at least as great as the strength of those connectors in the haunch, Figure 9. Further, it seems reasonable to assume that an upper bound on the strength of shear connectors in a haunch is that of identical shear connectors in a solid slab.

With these bounds available one might, with considerable judgement determine a reasonable value to use for design purposes. In a case where the shear connectors were relatively short compared to the height of the haunch, the actual strength might be expected to be relatively close to the lower bound while in cases where a large portion of the shear connector extends above the haunch into the slab, the actual strength might be expected to be much closer to the upper bound.

A series of eight pushout specimens with slabs only eight inches wide, Figure 10, was tested to determine the mode of failure and obtain data on actual strength. Details of the specimens are shown in Table IV and photographs of typical failures are shown in Figure 11 and 12. All specimens with 1/2-inch diameter studs failed by shearing of the studs

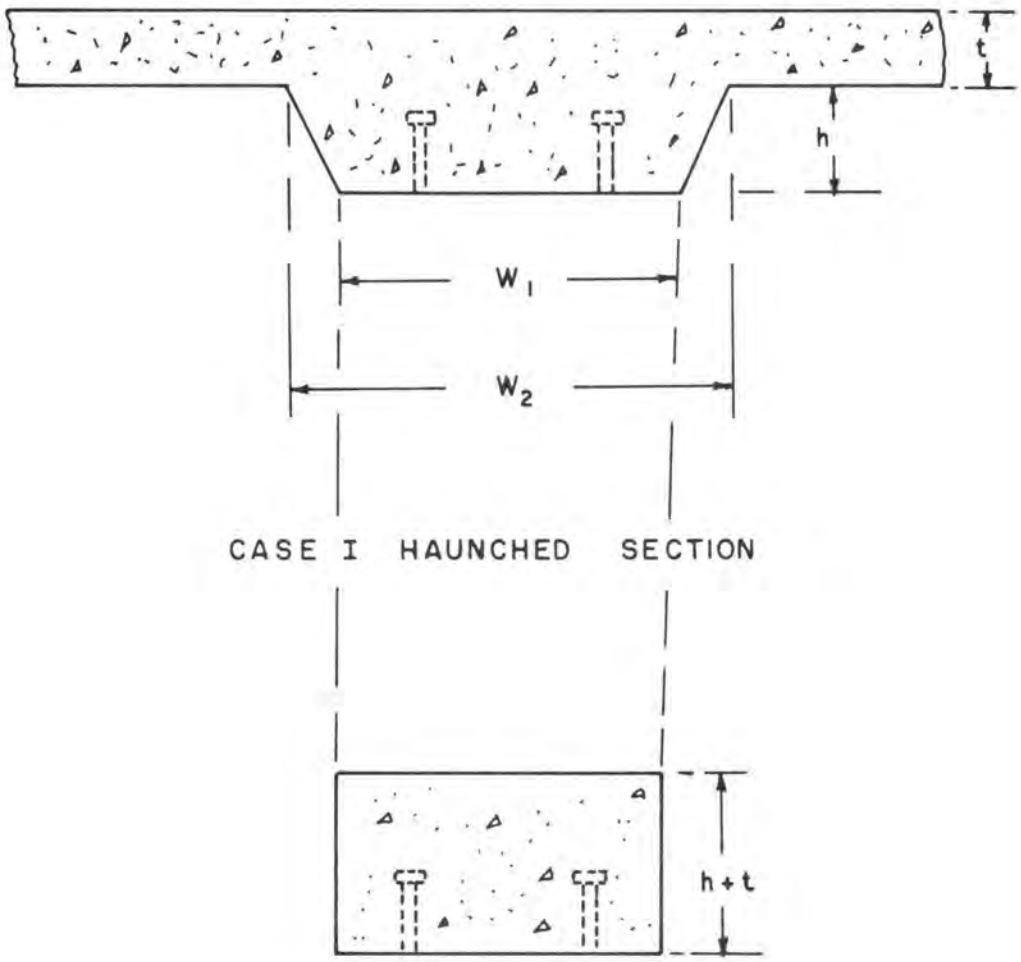

FIGURE 9 COMPARISON OF THE HAUNCHED SECTION WITH THE NARROW RECTANGULAR SLAB.

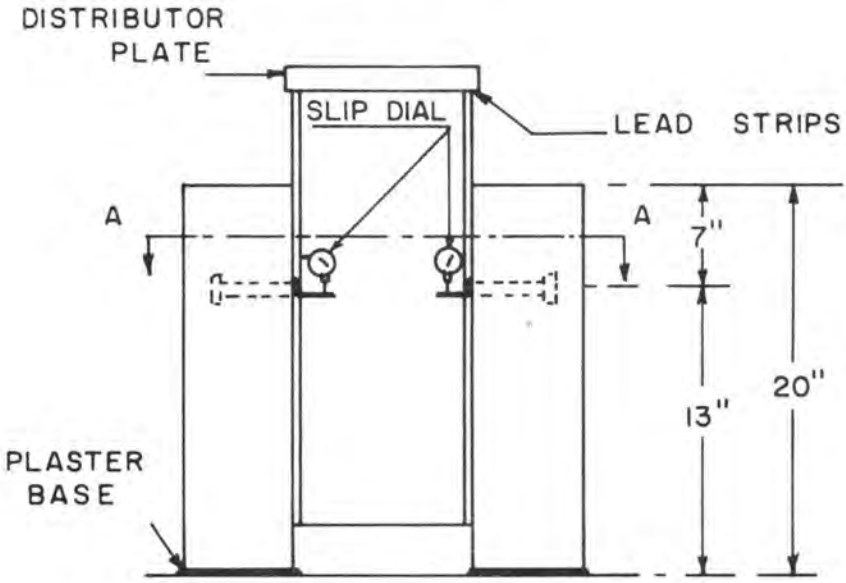

ELEVATION

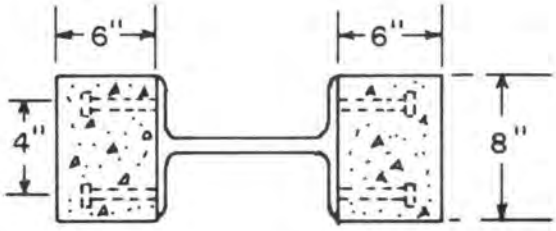

SECTION A-A

FIGURE 10 DETAILS OF PUSHOUT SPECIMENS

FIGURE 11 SPECIMENS N6B4HS-1 and N6B4HS-2 AFTER FAILURE

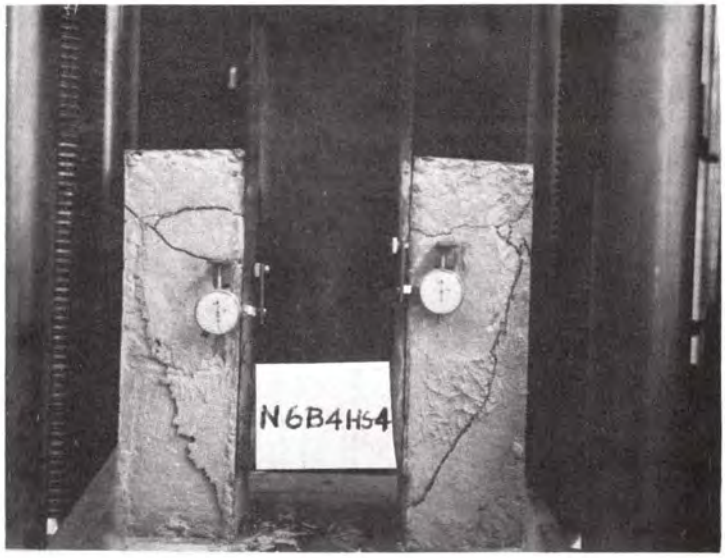

FIGURE 12 SPECIMENS N6B4HS-3 and N6B4HS-4 AFTER FAILURE

TABLE IV

RESULTS OF PUSHOUT AND CYLINDER TESTS

Specimen	Stud diameter (inches)	Stud length (inches)	f'_c (ksi)	E_c (ksi)	Ultimate Av. Slip (inches)	Load Load/stud (kips)	Type of failure
N4B4HS-1	.500	4.0	8.28	4.52×10^3	-	12.12	Stud
N4B4HS-2	.500	4.0	8.28	4.52×10^3	.1028	13.12	Stud
N4B4HS-3	.500	4.0	6.861	4.18×10^3	-	11.25	Stud
N4B4HS-4	.500	4.0	6.861	4.18×10^3	-	12.87	Stud
N6B4HS-1	.750	4.0	8.28	4.52×10^3	-	18.50	Concrete
N6B4HS-2	.750	4.0	8.28	4.52×10^3	.0329	23.75	Concrete
N6B4HS-3	.750	4.0	6.861	4.18×10^3	.0329	17.13	Concrete
N6B4HS-4	.750	4.0	6.861	4.18×10^3	-	20.0	Concrete

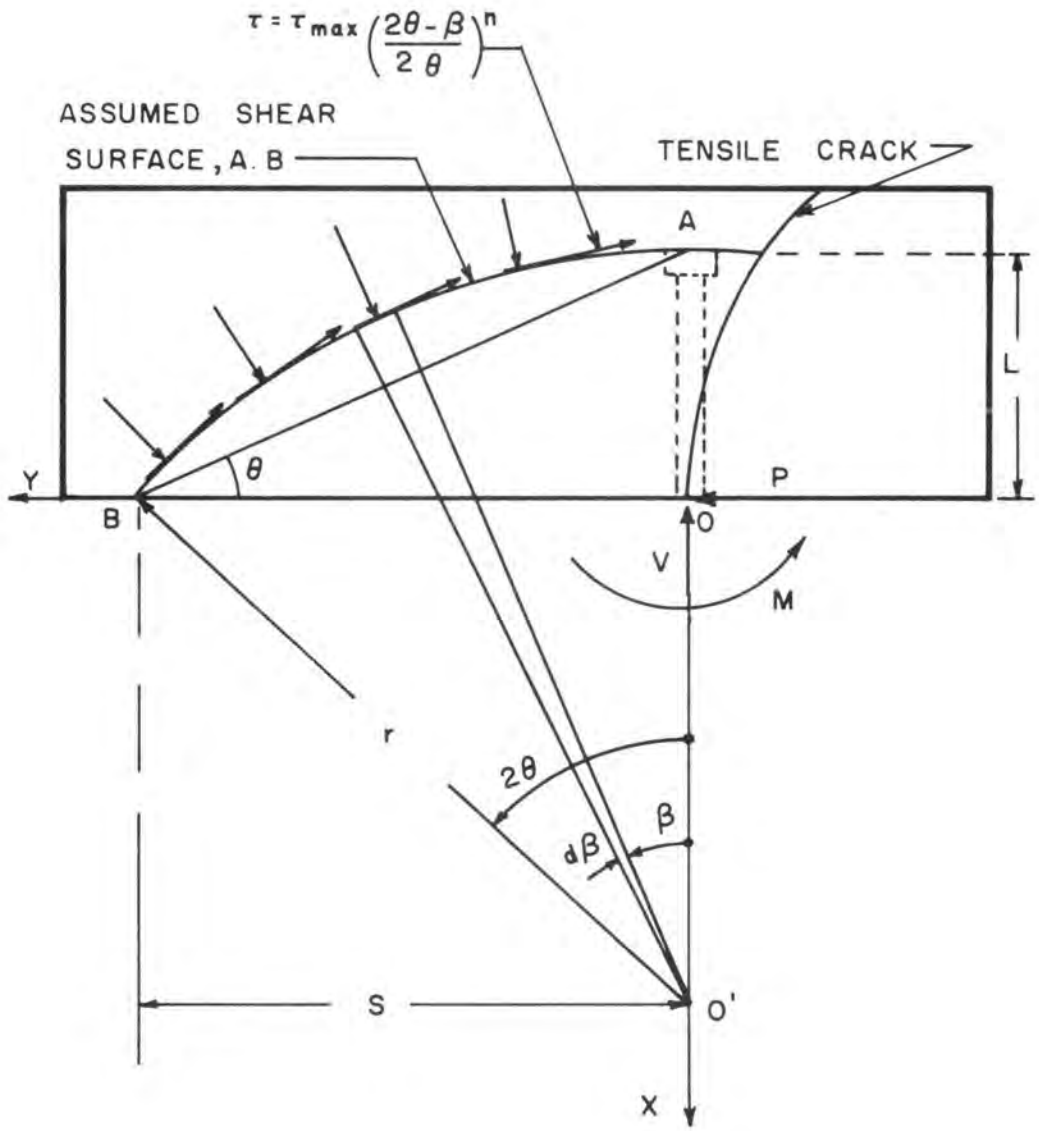

FIGURE 13 ASSUMED FAILURE SURFACE, A B

TABLE V

COMPARISON OF THEORETICAL LOAD PER CONNECTOR WITH EXPT. RESULTS

Specimen	D (inches)	L (inches)	w (inches)	f'_c (ksi)	Expt. Q (kips)	Theo. Q (Eq. 6) (kips)	Failure
			NARROW RECTANGULAR-SLAB PUSHOUTS				
N6B4HS-1	.750	4.0	8.0	8.28	18.5	20.8	Concrete
N6B4HS-2	.750	4.0	8.0	8.28	23.75	20.8	Concrete
N6B4HS-3	.750	4.0	8.0	6.86	17.12	17.2	Concrete
N6B4HS-4	.750	4.0	8.0	6.86	20.0	17.2	Concrete
			HAUNCHED PUSHOUTS				
N5H4B2.5	5/8	2.5	14	4.56	14.6	12.5	Pull out
L5H4A2.5	5/8	2.5	14	3.44	11.7	9.5	Pull out
N6H4A4	3/4	4	14	4.19	20.8	18.4	Concrete
N6H4B4	3/4	4	11	4.54	22.5	15.7	Concrete
L6H4A4	3/4	4	14	3.92	15.6	17.2	Concrete
L6H4B4	3/4	4	11	4.19	17.5	14.5	Concrete
			HAUNCHED BEAM				
LFB7-1	7/8	4	8.5	6.13	20.5	15.9	Concrete

and the strength was apparently not reduced by the narrow width of the slab. Specimens with 3/4-inch diameter studs failed by shearing of the slabs and the strengths were lower than those observed in specimens with wider slabs.

Both theory of elasticity and ultimate strength analyses of the specimens were made. Although the theory of elasticity solution indicates the stress distribution before cracking and the location of the first crack, it does not shed much light on the actual strength of a connector. The ultimate strength analysis is a semi-rational approach based on an assumed cylindrical failure surface as shown in Figure 13.

This analysis, with coefficients determined from the test specimens, indicates that when the spacing of rows of shear connectors along the beam is at least 2.3L each connector has a strength, Q_u, given by the following equation:

$$Q_u = 0.158\ f'_c\ wL/N \qquad (6)$$

where f'_c is the concrete strength, w is the width of the slab or haunch, L is the length of the shear connectors, and N is the number of shear connectors in the row across the beam. This strength, of course cannot exceed the strength of the connectors in a solid slab as indicated by equations 1 or 2. Comparisons of strengths predicted by this equation and test results are shown in Table V. It should be noted that the predicted strengths should be lower bounds to the experimental results for haunched pushouts and the beam tests.

When rows of shear connectors are spaced closer than 2.3L

the failure surfaces overlap as shown in Figure 14. The analysis was extended rationally to cover this case and a dimensionless plot showing the effects of row spacing is shown in Figure 15. This solution indicates that although the failure surfaces overlap the shear connection strength is not appreciably reduced until the shear connector spacing becomes less than half of 2.3L or 1.15L. It should be noted that this conclusion is based entirely on theoretical work and there are no test data available for verification.

As a practical example, consider the case of three, three-quarter by four inch studs embedded in a haunch that is 20 inches wide and 4 inches high. Equation 2 indicates that the strength of each of these studs embedded in a solid slab would be 24.7 kips. However, equation 6 indicates that the lower bound strength of each of these connectors is only 16.8 kips. In fact the lower bound capacity of two connectors is almost the same as the lower bound capacity of three connectors when embedded in a 20 inch wide haunch.

If the haunch is four or more inches high so that the studs do not extend into the main slab at all, the 16.8 kips per connector is probably realistic. If on the other hand the haunch were only 2 inches high so that half the length of the stud extended into the main slab, the actual strength might be expected to be substantially greater than the lower bound. Since in this case half the length of the studs extends into the slab it might be reasonable to assume that the strength of these connectors is halfway between the lower and upper bound,or approximately 20.7 kips per connector.

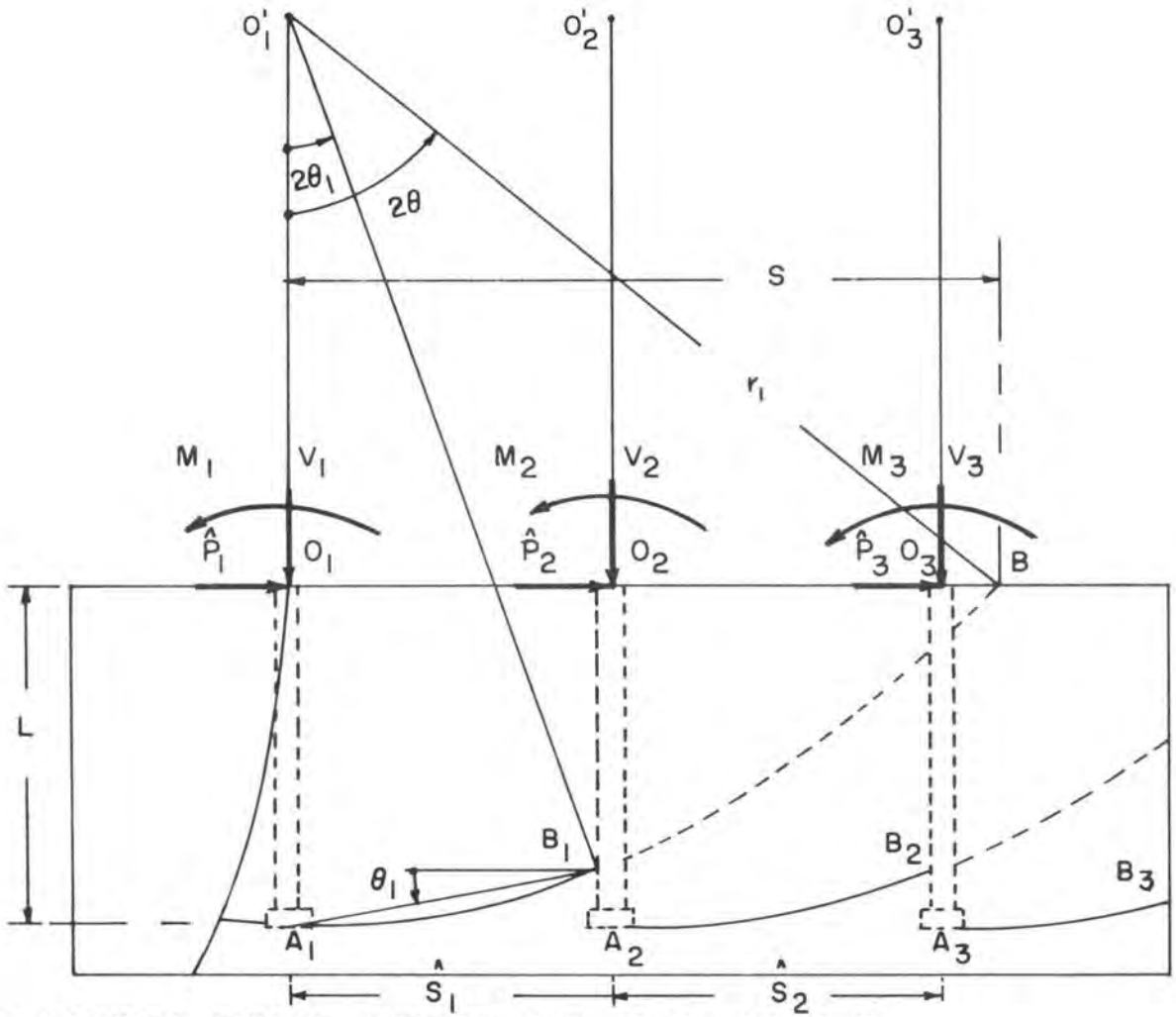

FIGURE 14 ASSUMED FAILURE SURFACE, A_1B_1, A_2B_2 AND A_3B_3

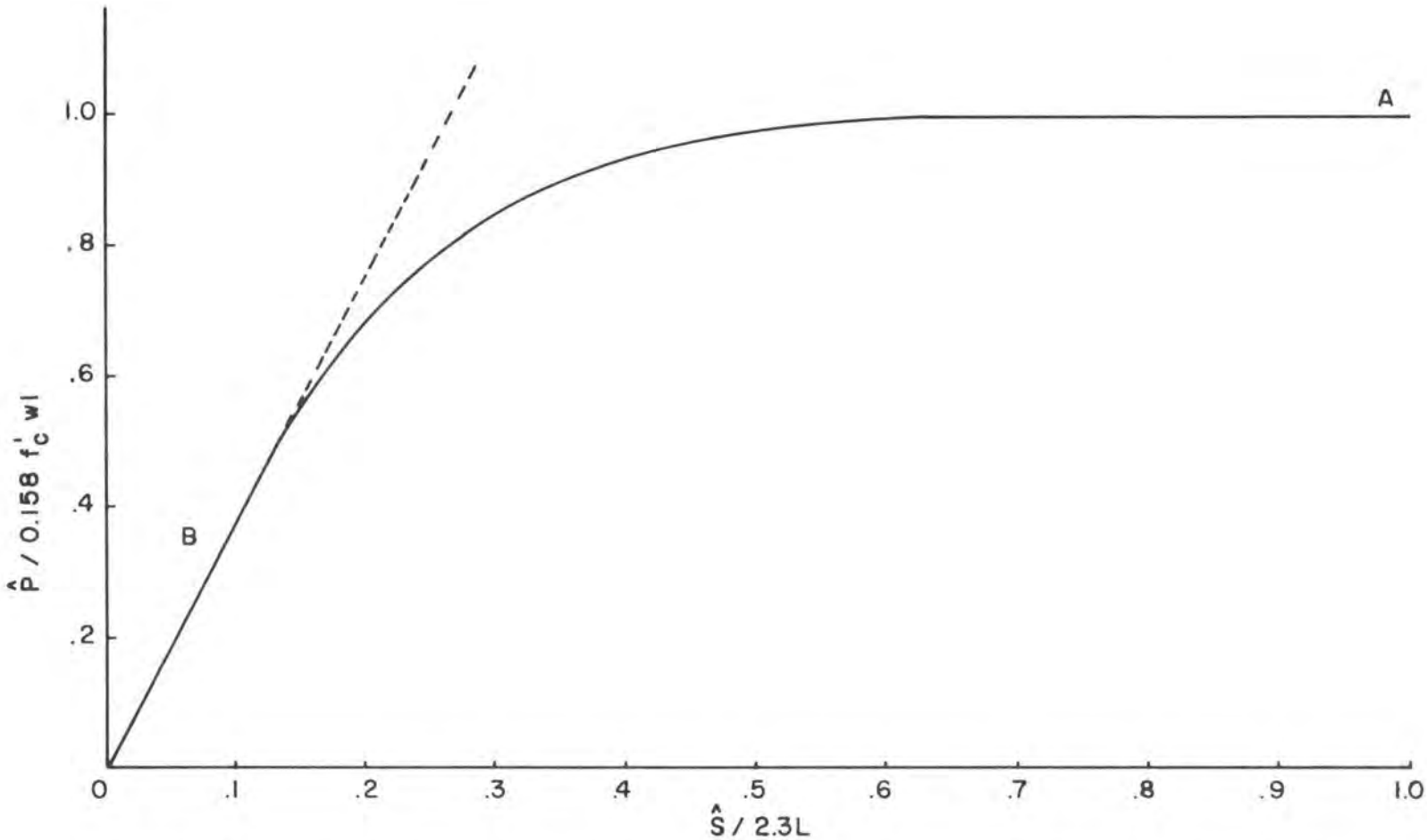

FIGURE 15 DIMENSIONLESS PLOT OF SHEAR CONNECTION STRENGTH VS SHEAR CONNECTOR SPACING.

Chapter III

BEHAVIOR OF BEAMS

3.1 Numerical Analysis

Once the load-slip relation for the shear connectors had been developed it was possible to develop a completely rational analysis for predicting the behavior of composite beams under load. The analysis is an iterative procedure which accounts for the nonlinear load-slip characteristics of the shear connectors, an ideally-elastic-plastic stress-strain relation for the steel, and a bilinear stress-strain relation for the concrete. A computer program was written in the FORTRAN language to carry out the iterative procedure involved.

Data concerning geometry of the slab and haunch, properties of the concrete, geometry of the steel section, mechanical properties of the steel, geometry of the span and loads, location of shear connectors, and coefficients describing the load-slip equation are read into the computer as variables. Beginning from a very small load the program automatically increments the loads until failure is indicated. After the application of each load increment the following data are printed out:

1. Load
2. Mid-span Deflection
3. Quarter-Span Deflection

4. Strain at the Bottom of the Beam at Points Midway Between Shear Connectors
5. Strain at the Top of the Beam at Points Midway Between Shear Connectors
6. Strain in the Bottom of the Slab at Points Midway Between Shear Connectors
7. Strain at the Top of the Slab at Points Midway Between Shear Connectors
8. The Slip at Each Shear Connector
9. The Force Carried by Each Shear Connector
10. Mode of Failure (after last load increment only)

With this program it is possible to analyse rather completely a large number of beams with widely varying properties. It is possible to study the effects of shear connector spacing, slab width, yield point of steel, elastic modulus of the concrete, etc. A detailed description of the program its operation, and limitations are given in reference 16.

3.2 Beam Tests

As a check on the validity of the previously described analysis, eight composite beams were fabricated and tested in the laboratory. These beams were designed with widely varying characteristics so that the analysis could be checked under widely varying conditions. Included were beams with lightweight slabs, normal weight slabs, stud shear connectors and channel shear connectors. Concrete strength varied from 3 ksi to 7.5 ksi and steel beams with yield points varying from 36.9 ksi to 61.8 ksi were used. Stud diameters varied from 1/2-inch to 7/8-inch and channel shear connectors were 4-inch by 5.4 plf channels, 4 inches in length. Details

of the test beams are shown in Figure 16 and Table VI. Figure 17 shows a beam test in progress. Complete details of the beam test are given in reference 16.

A comparison of the predicted and observed ultimate moments in the beams is made in Table VI. In every case the predicted capacity was within 10 percent of the observed capacity. A further comparison of predicted and observed results is presented in Figures 18 through 25 where predicted and observed load-deflection curves are shown for each of the beams tested. It should be noted that development of the analysis was rational in nature and completely independent of data from the beam tests. Thus, the analysis can be expected to be just as reliable in predicting the behavior of these test beams.

The agreement between predicted and observed values for strain and slip were not quite as good as for deflection. However, the experimental measurement of strain and slip is much more difficult and considerably less accurate than the measurement of deflection. This undoubtly accounts for at least part of the discrepancy between measured and predicted values. Even with these difficulties the agreement between predicted and observed results was generally within 15 percent. Figure 26 shows predicted and observed slip distributions along the length of beam LFB5-1.

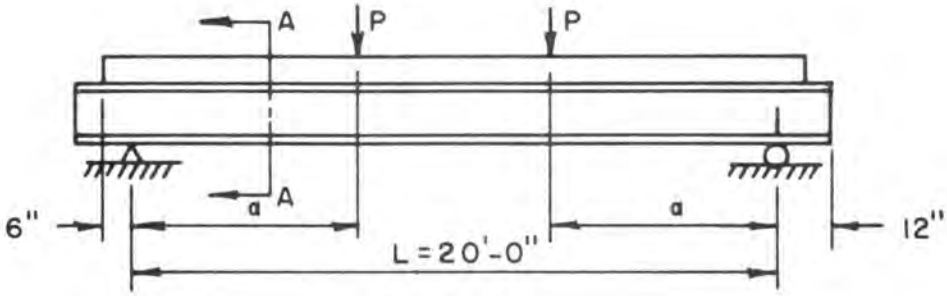

ELEVATION

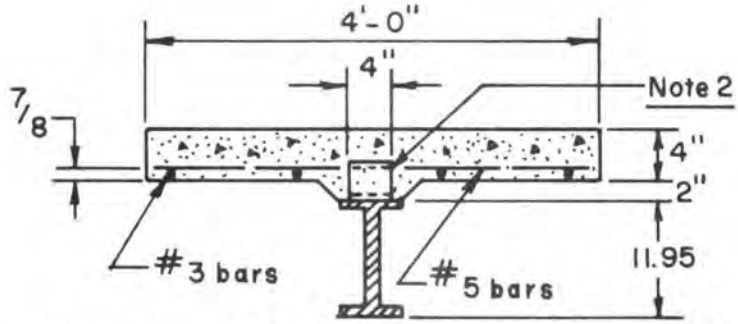

Section A-A LFB7-1, LFB4C-1, NFB4C-1, NFB4-1

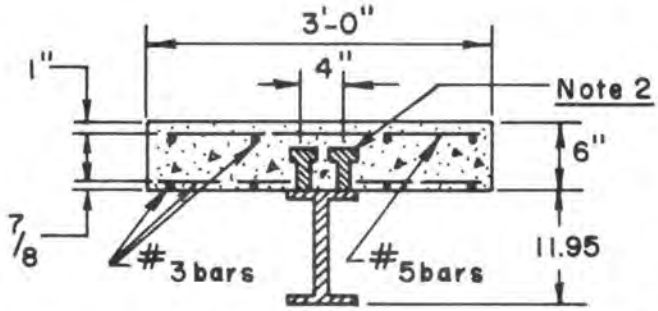

Section A-A NFB4C-2, LFB5-1, NFB5-1, LFB7-2

NOTES

1. All beams are 12 WF 27.
2. All alike on any one beam, either studs or channels.
3. For LFB7-1, LFB4C-1, NFB4C-1, and NFB4-1 $a = L/4$
4. For NFB4C-2, LFB5-1, NFB5-1 and LFB7-2 $a = L/3$

FIGURE 16 DETAILS OF TEST BEAMS

TABLE VI

DETAILS OF TEST BEAMS

BEAM	CONCRETE TYPE	f_c' Ksi	STATIC YP OF STEEL Ksi	SHEAR CONN. TYPE	NO. OF CONN.	PREDICTED M_u kip in.	TEST M_u kip.in.	TYPE OF FAILURE
LFB7-1	L W	6.1	37.3	7/8 x 4 studs	8	2370	2440	shear conn.
LFB4C-1	L W	5.6	37.0	4"x4" channels	10	2970	3000	shear conn.
NFB4C-1	N W	6.8	36.9	4"x4" channels	4	2370	2520	shear conn.
NFB4-1	N W	6.6	37.4	1/2 x 4 studs	24	2370	2520	shear conn.
NFB4C-2	N W	7.5	61.0	4"x4" channels	24	5430	5910	slab
LFB5-1	L W	3.0	60.0	5/8 x 2 1/2 studs	66	4160	4550	slab
NFB5-1	N W	5.6	61.8	5/8 x 4 studs	76	5110	5680	slab
LFB7-2	L W	4.2	60.0	7/8 x 4 studs	56	4640	4720	slab

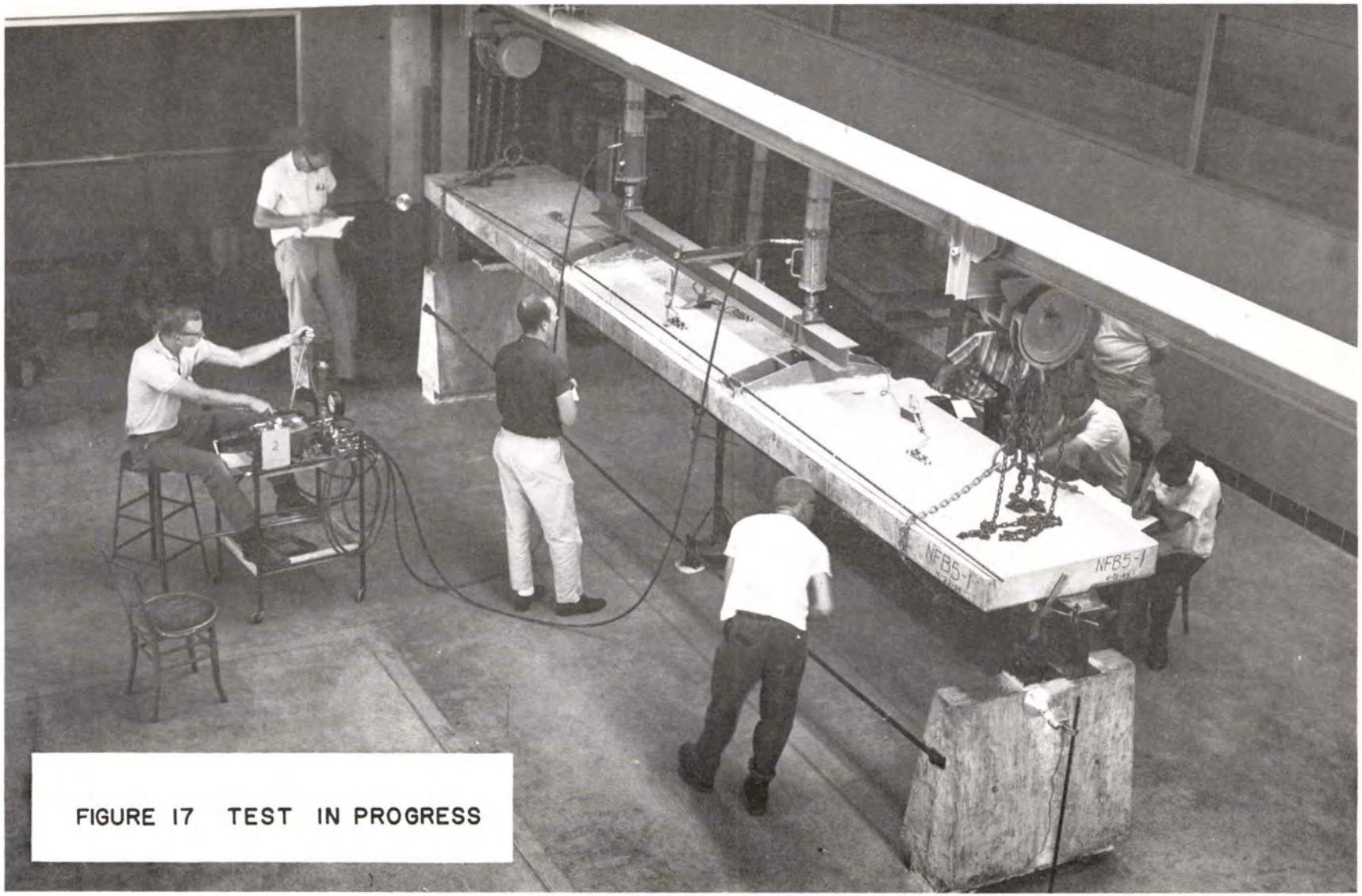

FIGURE 17 TEST IN PROGRESS

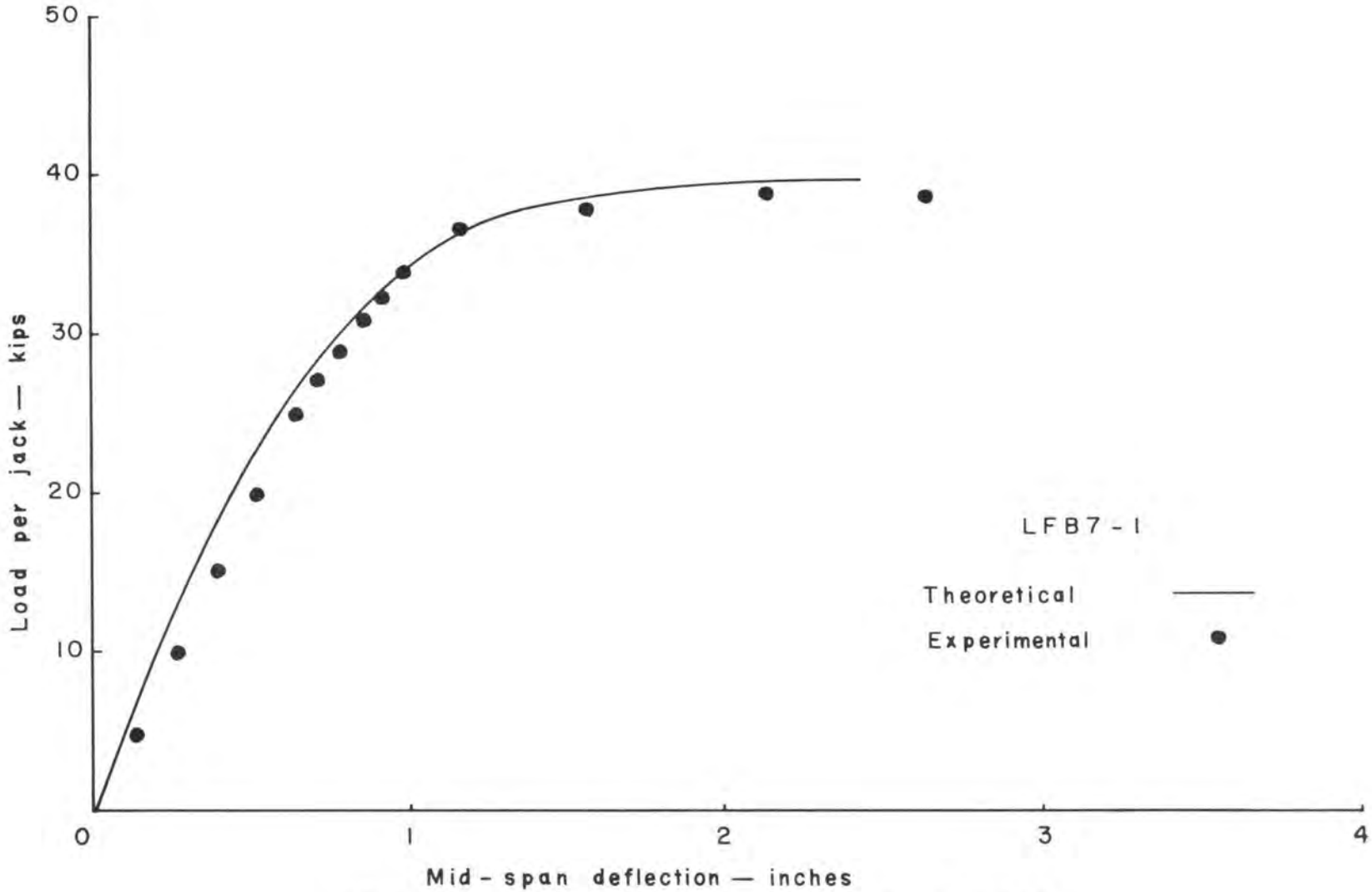

FIGURE 18 LOAD VS DEFLECTION FOR BEAM LFB7-I

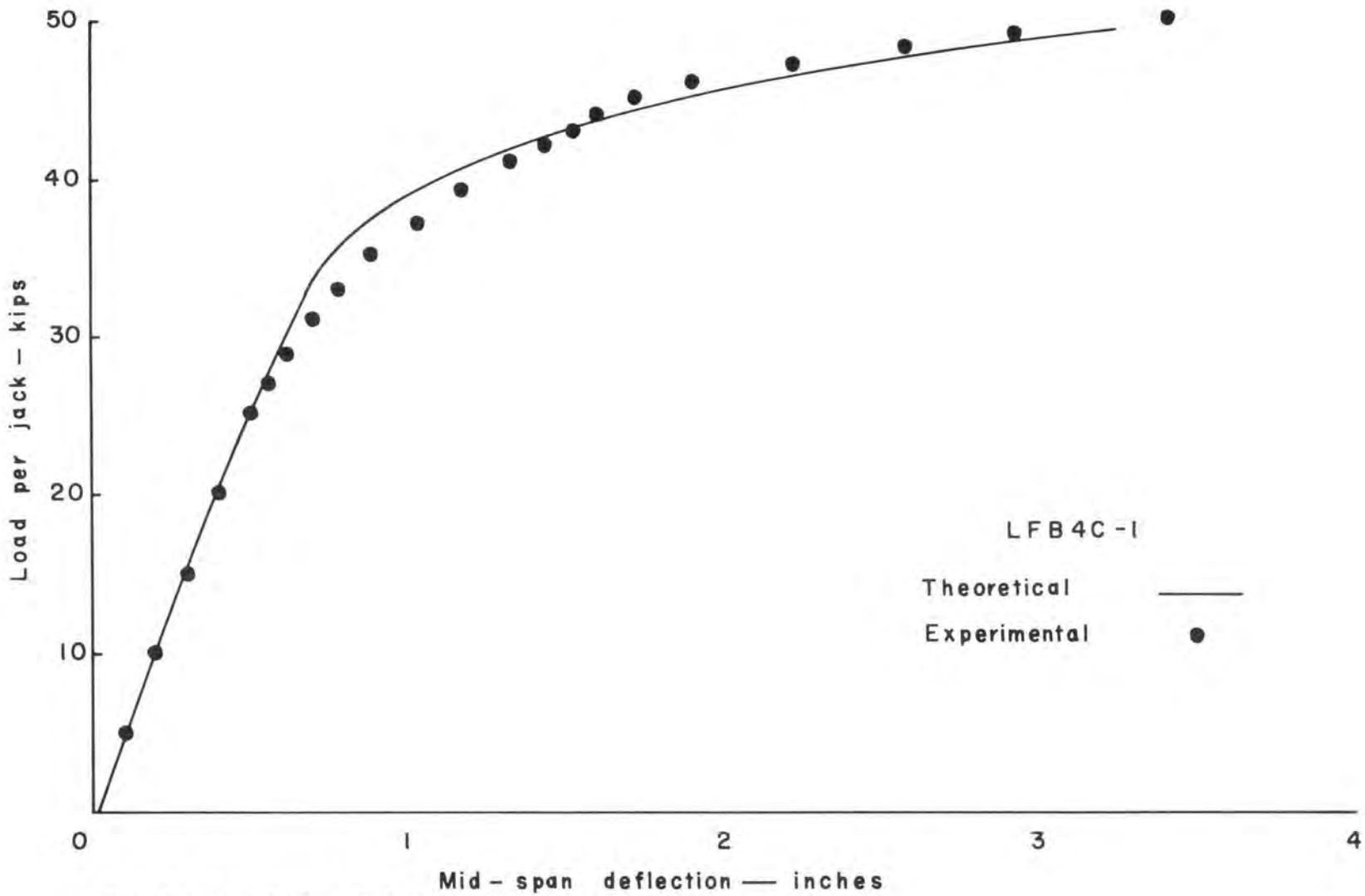

FIGURE 19 LOAD VS DEFLECTION FOR BEAM LFB4C-1

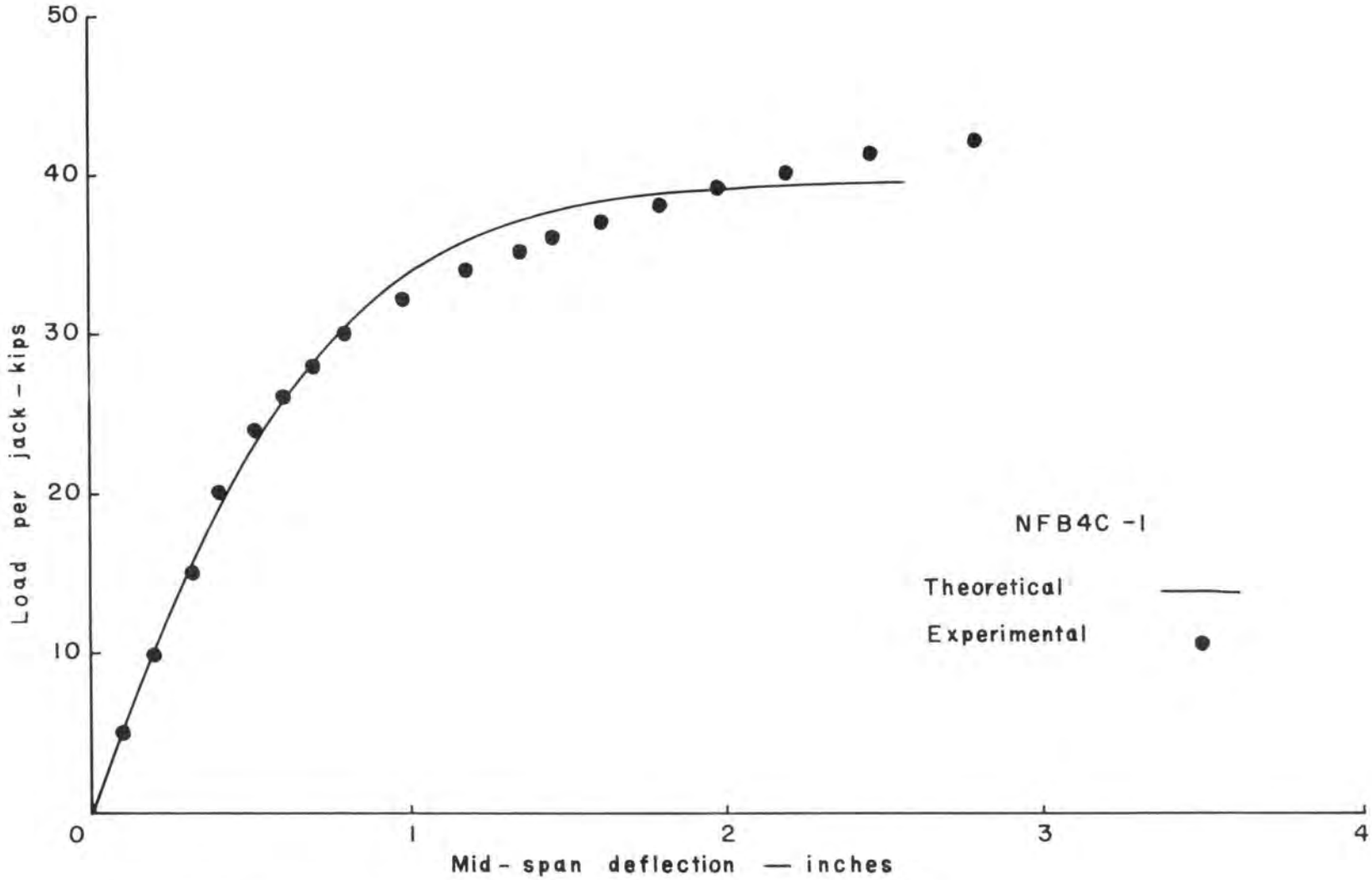

FIGURE 20 LOAD VS DEFLECTION FOR BEAM NFB4C-I

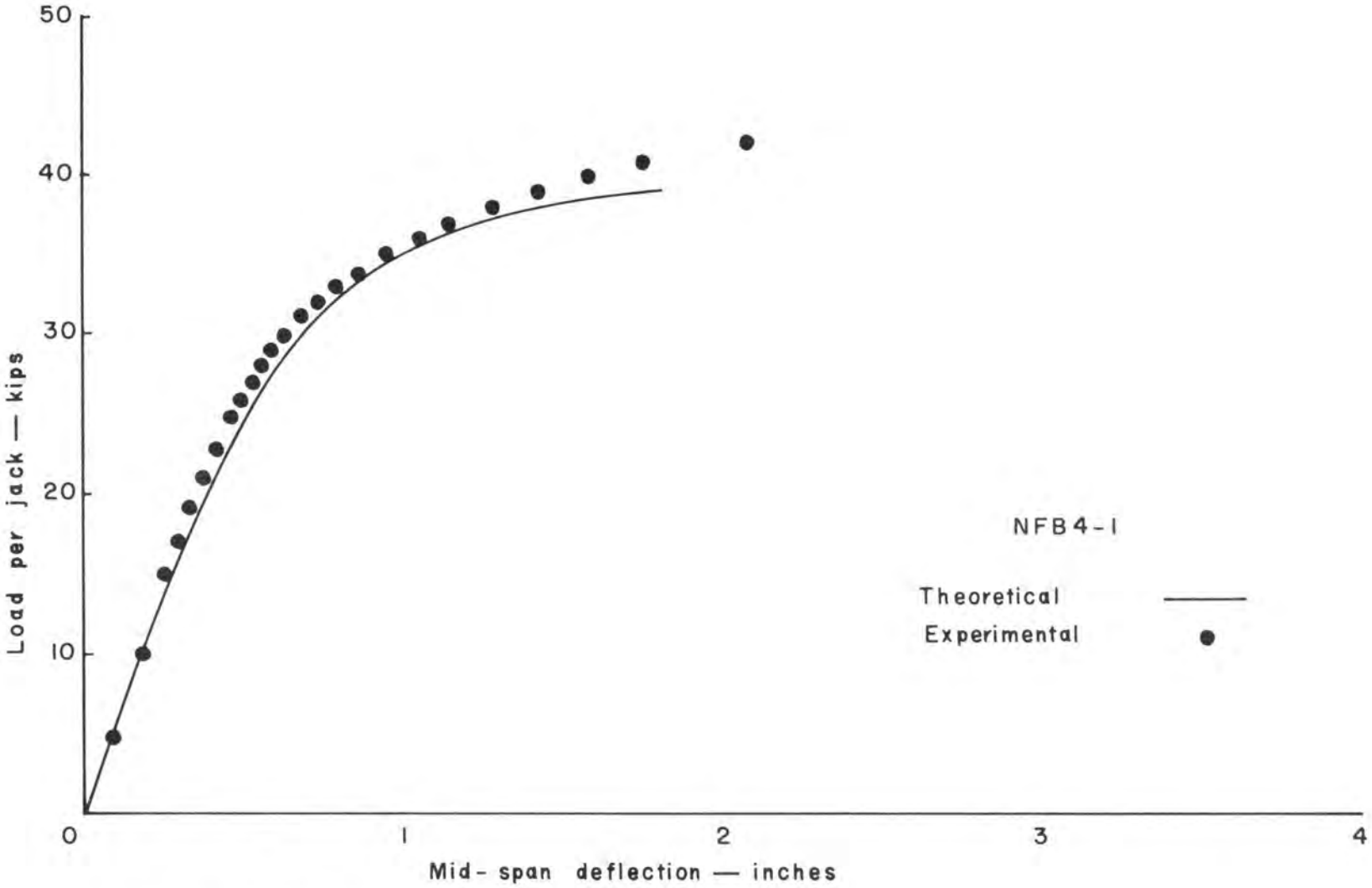

FIGURE 21 LOAD VS DEFLECTION FOR BEAM NFB4-1

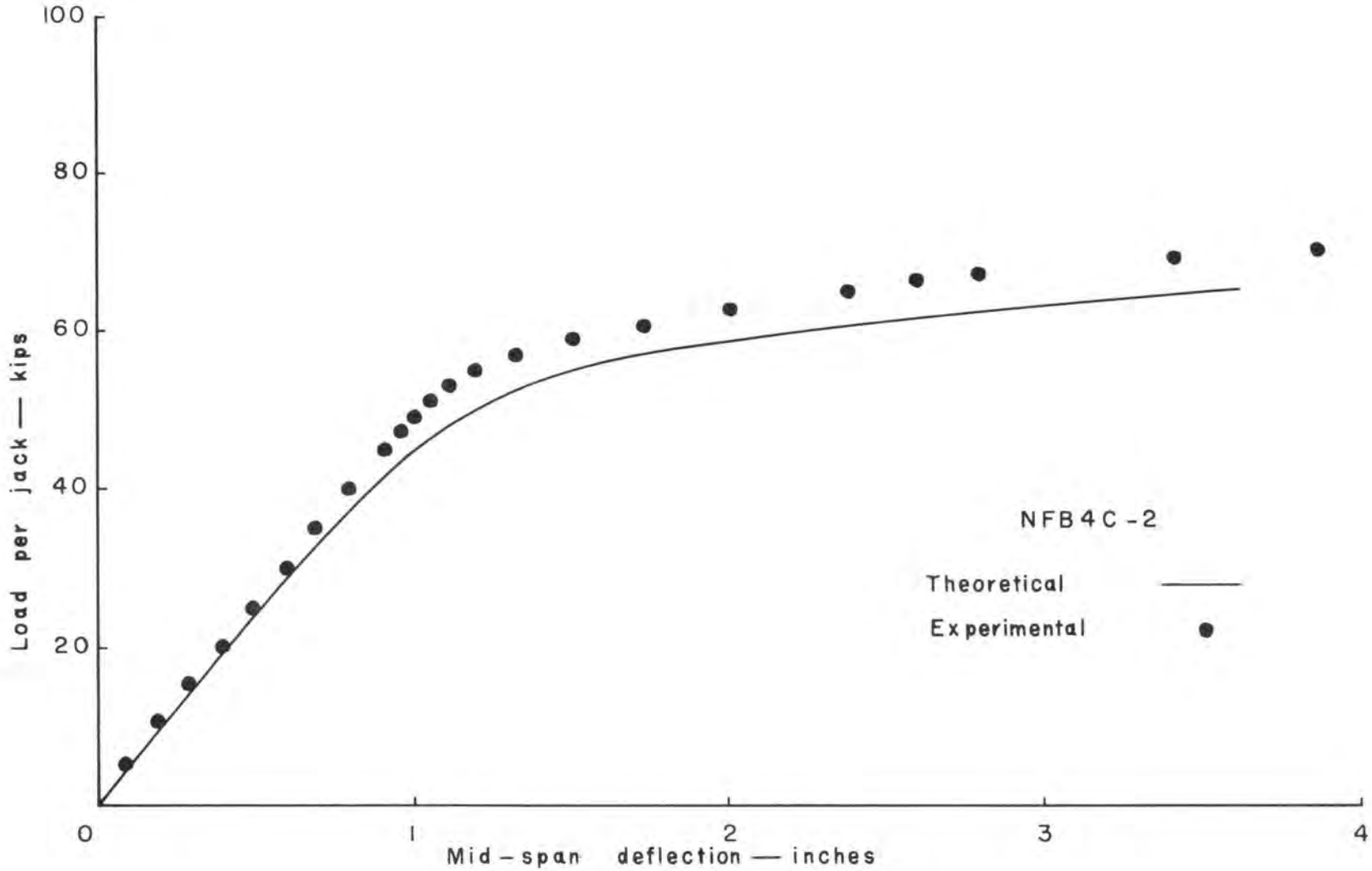

FIGURE 22 LOAD VS DEFLECTION FOR BEAM NFB4C-2

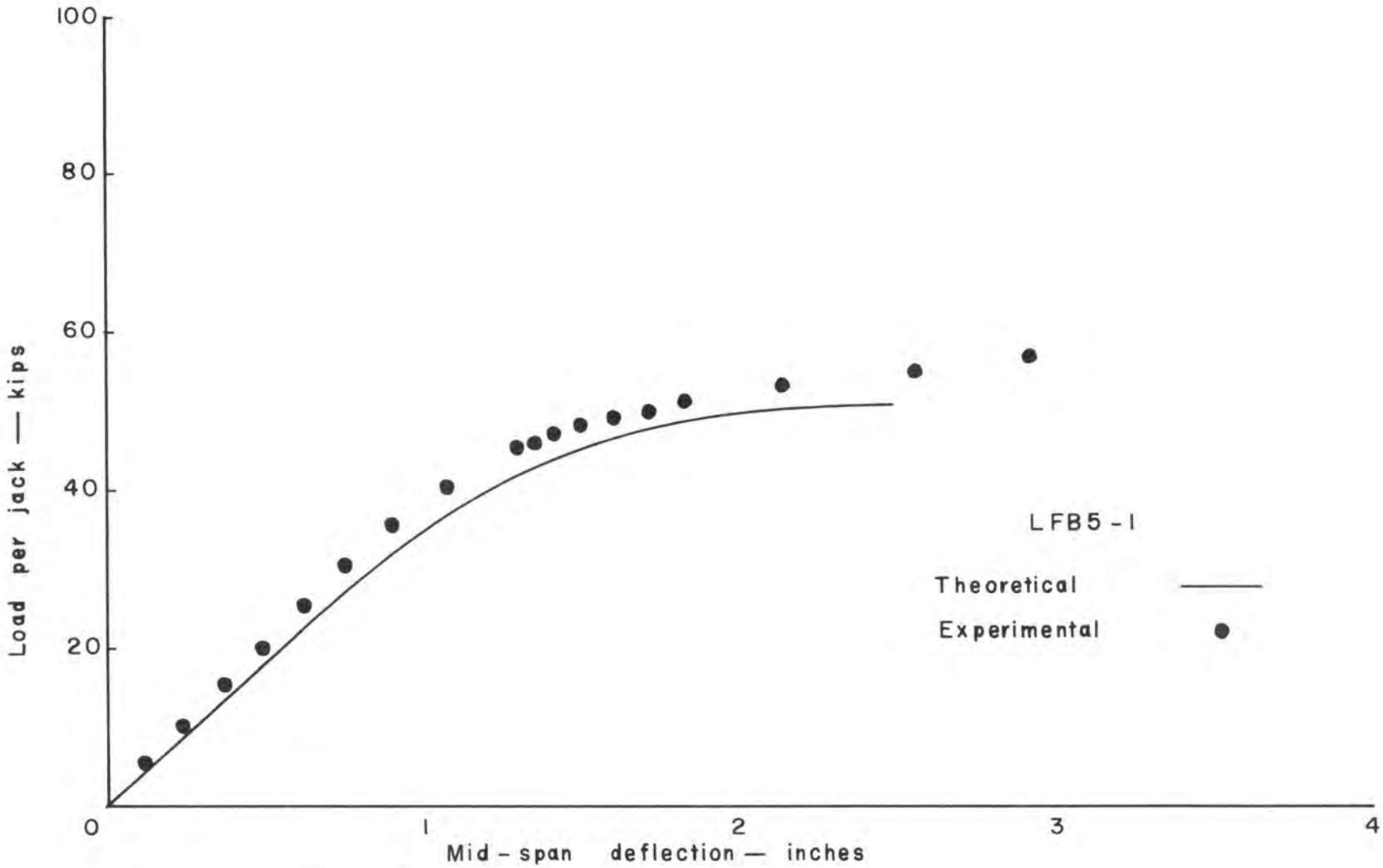

FIGURE 23 LOAD VS DEFLECTION FOR BEAM LFB5-I

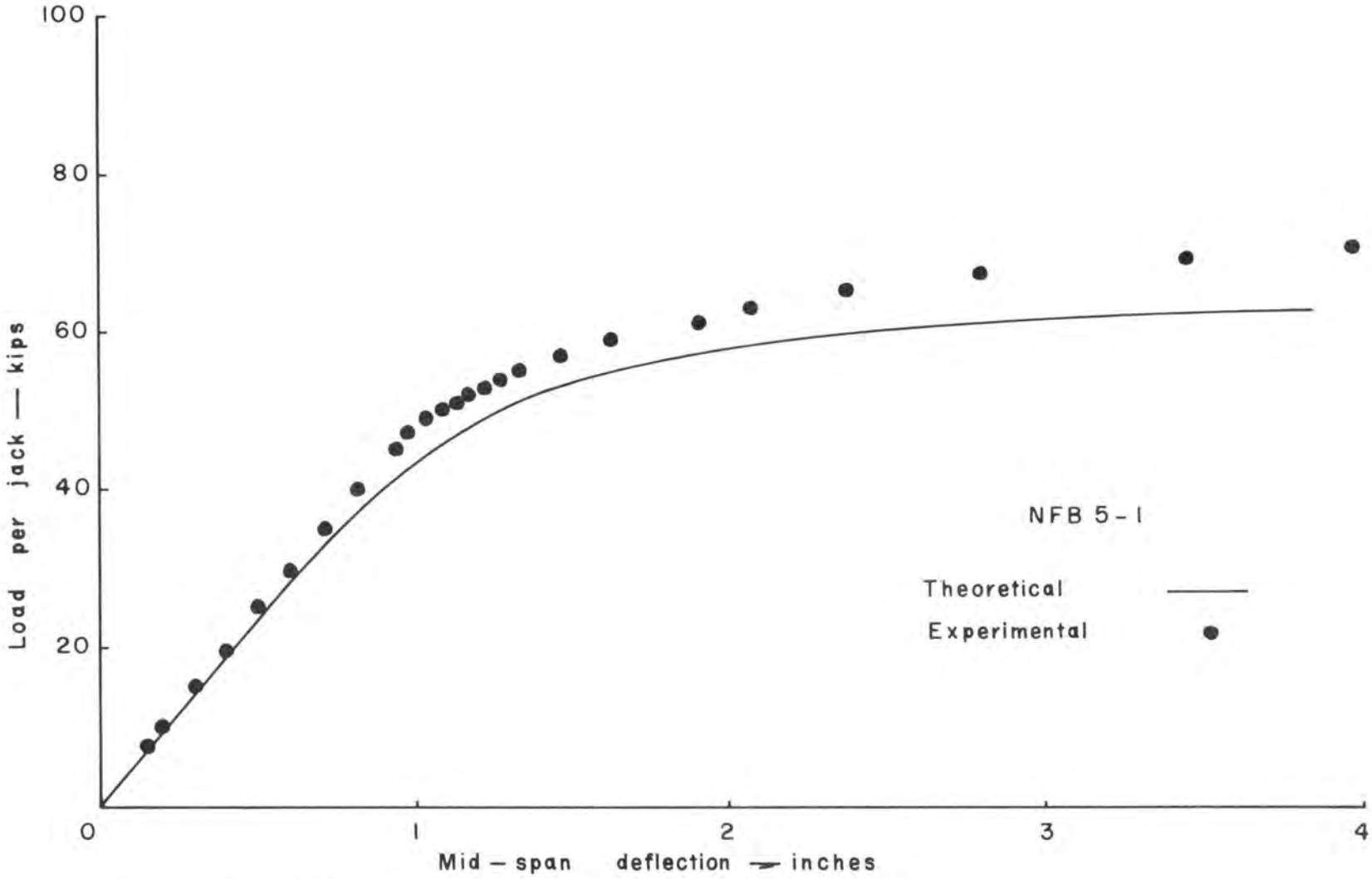

FIGURE 24 LOAD VS DEFLECTION FOR BEAM NFB5-I

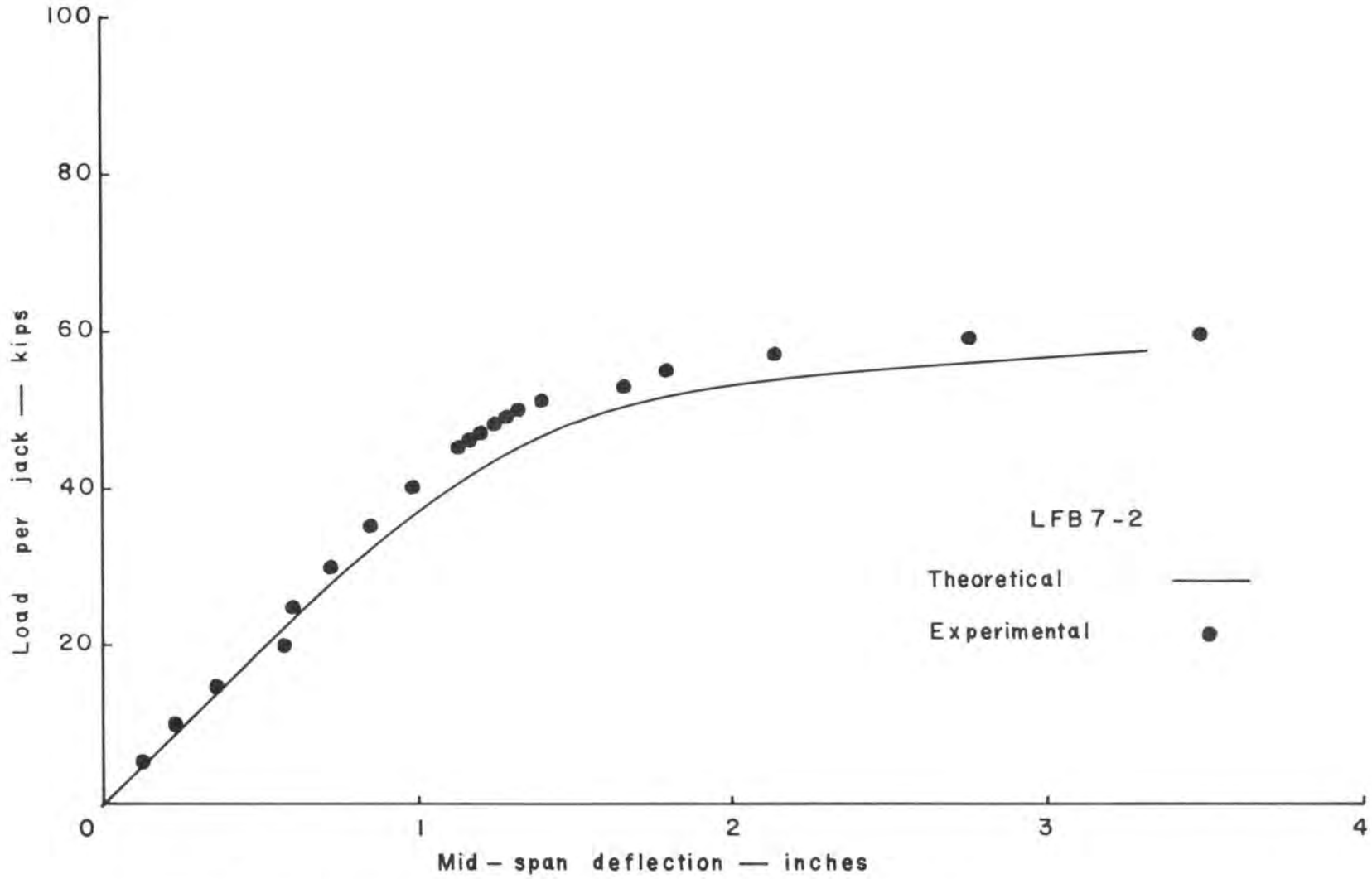

FIGURE 25 LOAD VS DEFLECTION FOR BEAM LFB7-2

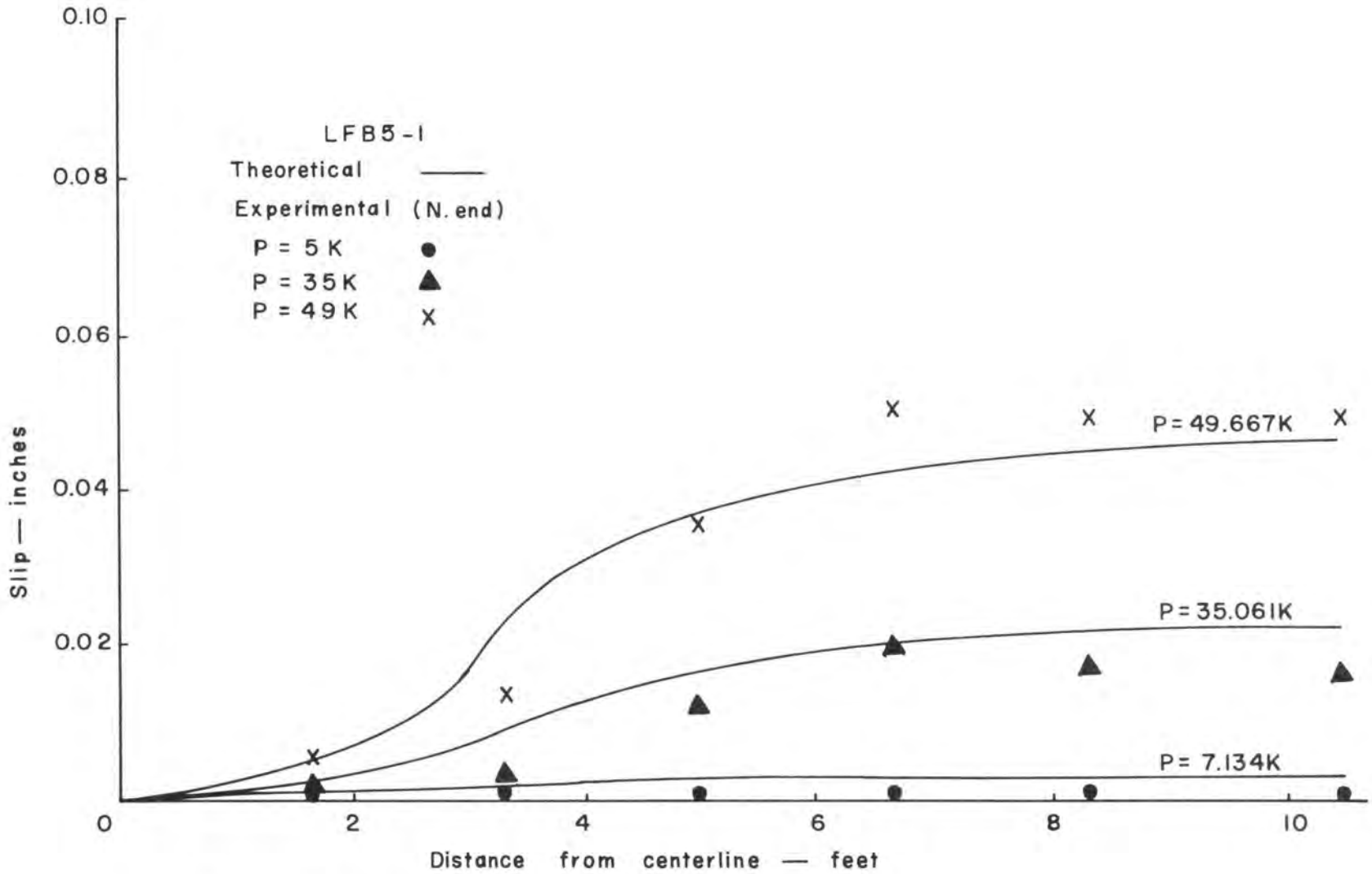

FIGURE 26 SLIP DISTRIBUTION ALONG BEAM LFB5-I

CHAPTER IV

A COMPARISON WITH CURRENT PRACTICE

The final phase of the investigation involved a comparison of the previous findings with current design assumptions. A series of typical beams with spans ranging from 30 to 80 feet were designed in accordance with 1961 AASHO specifications except that the shear connectors were designed for the loading condition which produces maximum moment rather than that for maximum shear. This resulted in a smaller total number of connectors than would be required by the maximum shear loading. These beams, which were designed for H20-S16-44 loading, were subsequently analyzed with the previously developed computer analysis. Stresses, deflections, and shear connector forces were compared with corresponding values computed on the basis of current design assumptions. During the course of designing these beams, various methods of determining the total number of shear connectors were examined (19).

Since in many bridges the composite action is designed for live load only, the behavior of composite beams under a moving load was of particular interest. Unfortunately, computer limitations at the time the analysis was developed forced the development of an analysis which was limited to symmetrical loadings only. It was therefor necessary to simulate the single moving load with symmetrically placed moving loads which would produce the same moment and shear envelopes as the single moving load. To simulate a single moving load, P, a load P is first placed at each support. These two

loads are then simultaneously moved toward the center of the span and reduced in magnitude according to the formula

$$P' = P(1-\frac{a}{l})$$

As shown in Figure 27, this pair of symmetrically placed variable moving loads produces maximum shear and moment envelopes which are identical to those produced by the single moving load. The only difference between the moment and shear envelopes produced by these two loading configurations is the minimum shear envelope as indicated by the dashed line in Figure 27.

Each of the design examples was analyzed under this simulated moving load condition. The results were similar in all cases and only the results from the 60 foot beam will be presented here.

The basic difference between the analysis used in current design practice and the analysis developed in this investigation concerns the nature of the shear connection. In current practice it is assumed that the shear connection is rigid and that there is no slip between the slab and the steel beam. The transformed composite section is then analyzed as a homogeneous elastic beam. In fact, the shear connector is to a degree flexible and the analysis of this investigation takes into account the loss of interaction resulting from relative movement between the slab and steel beam. Thus, in subsequent comparisons the two methods will be referred to as the rigid connector analysis and the flexible connector analysis.

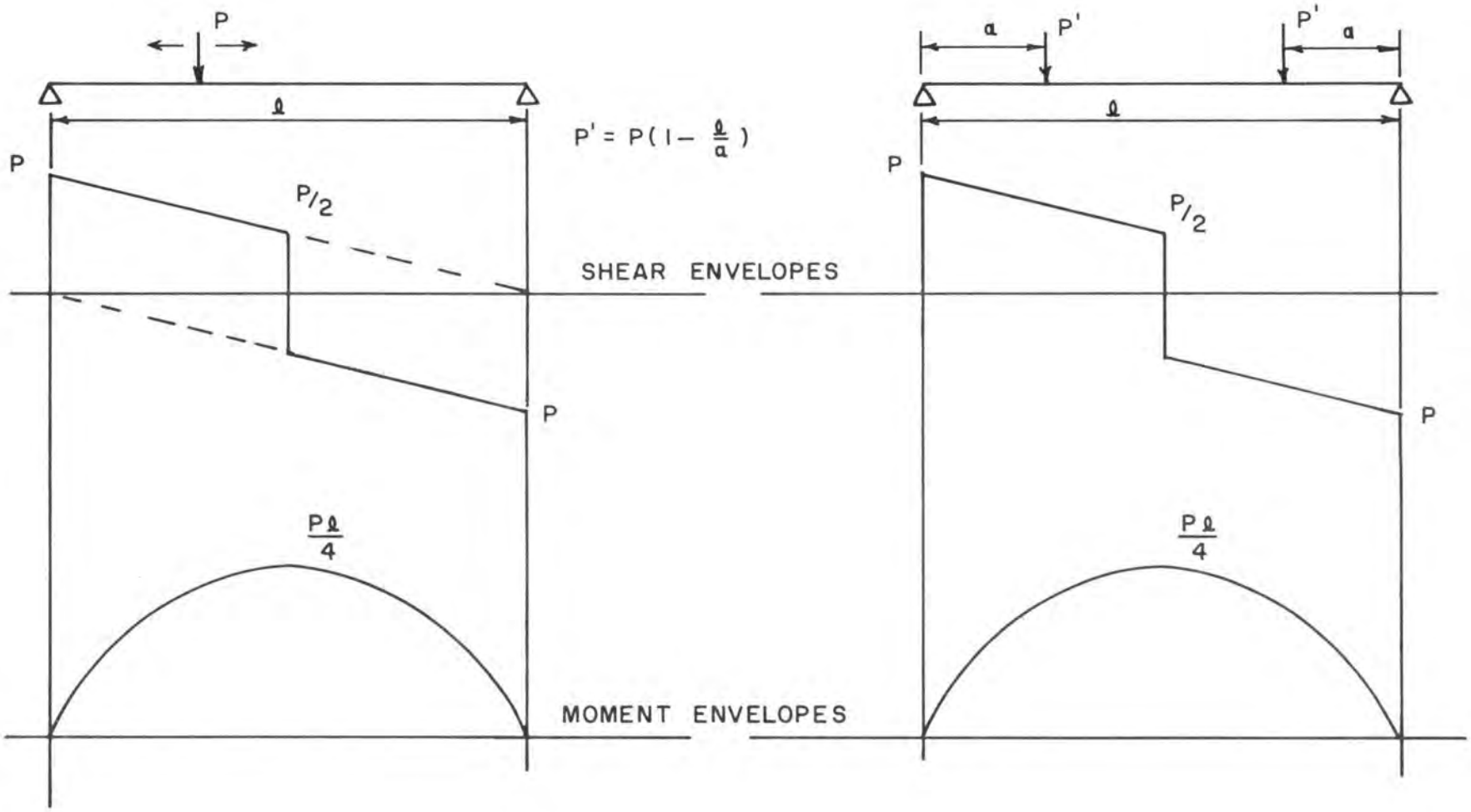

FIGURE 27 SHEAR AND MOMENT ENVELOPES FOR SIMULATED MOVING LOAD.

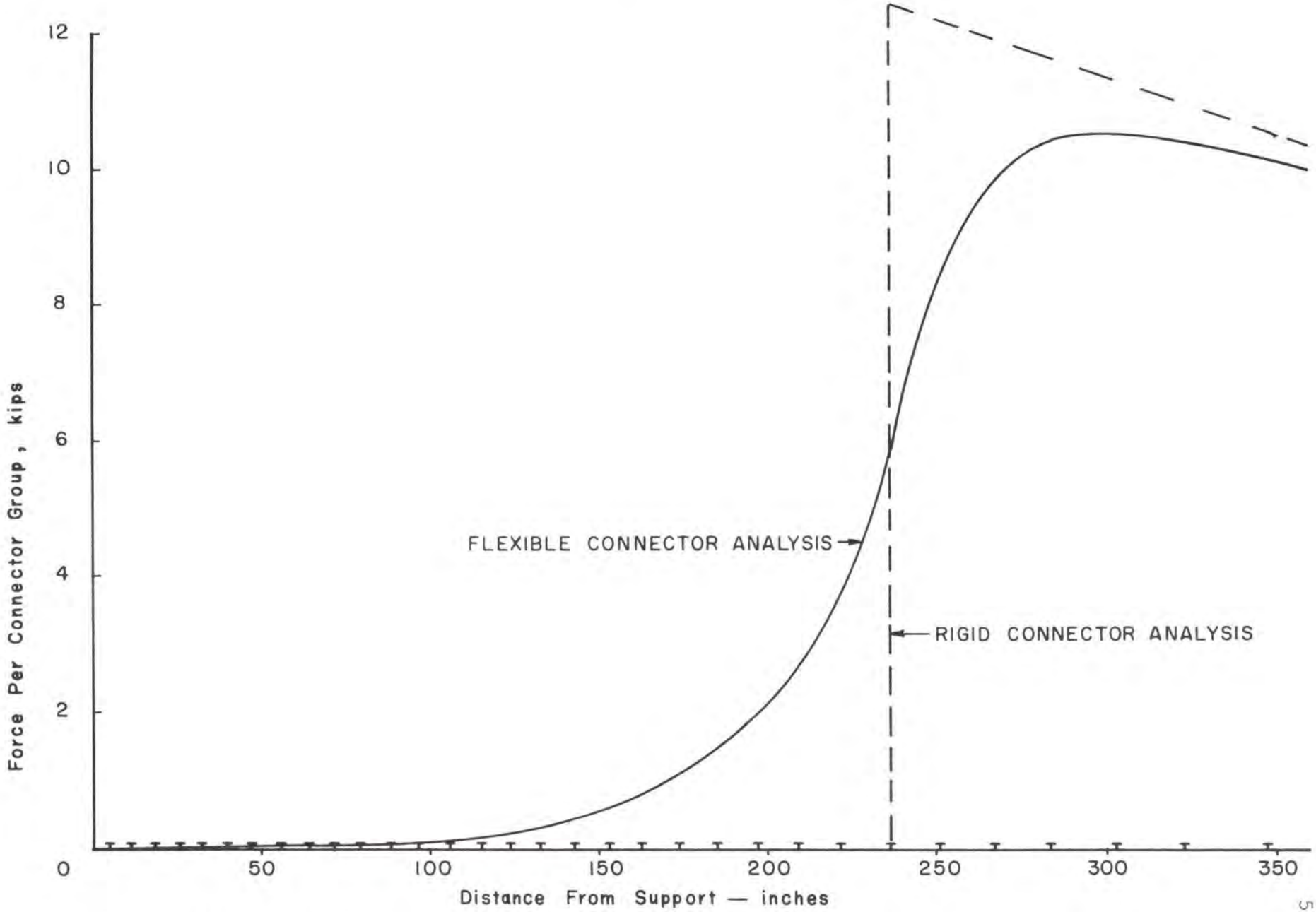

FIGURE 28 INFLUENCE LINE FOR CONNECTOR GROUP 26

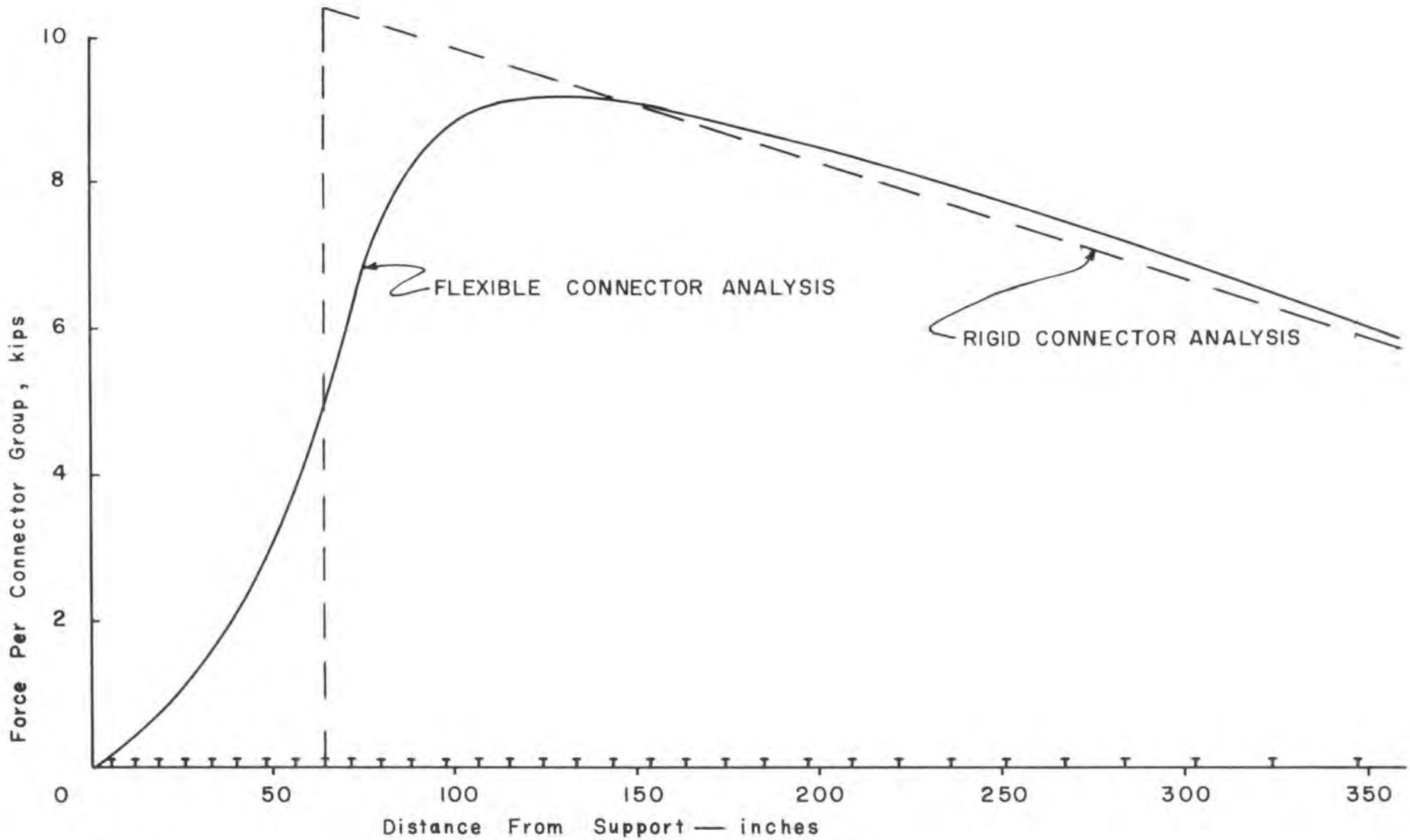

FIGURE 29 INFLUENCE LINE FOR CONNECTOR GROUP 6

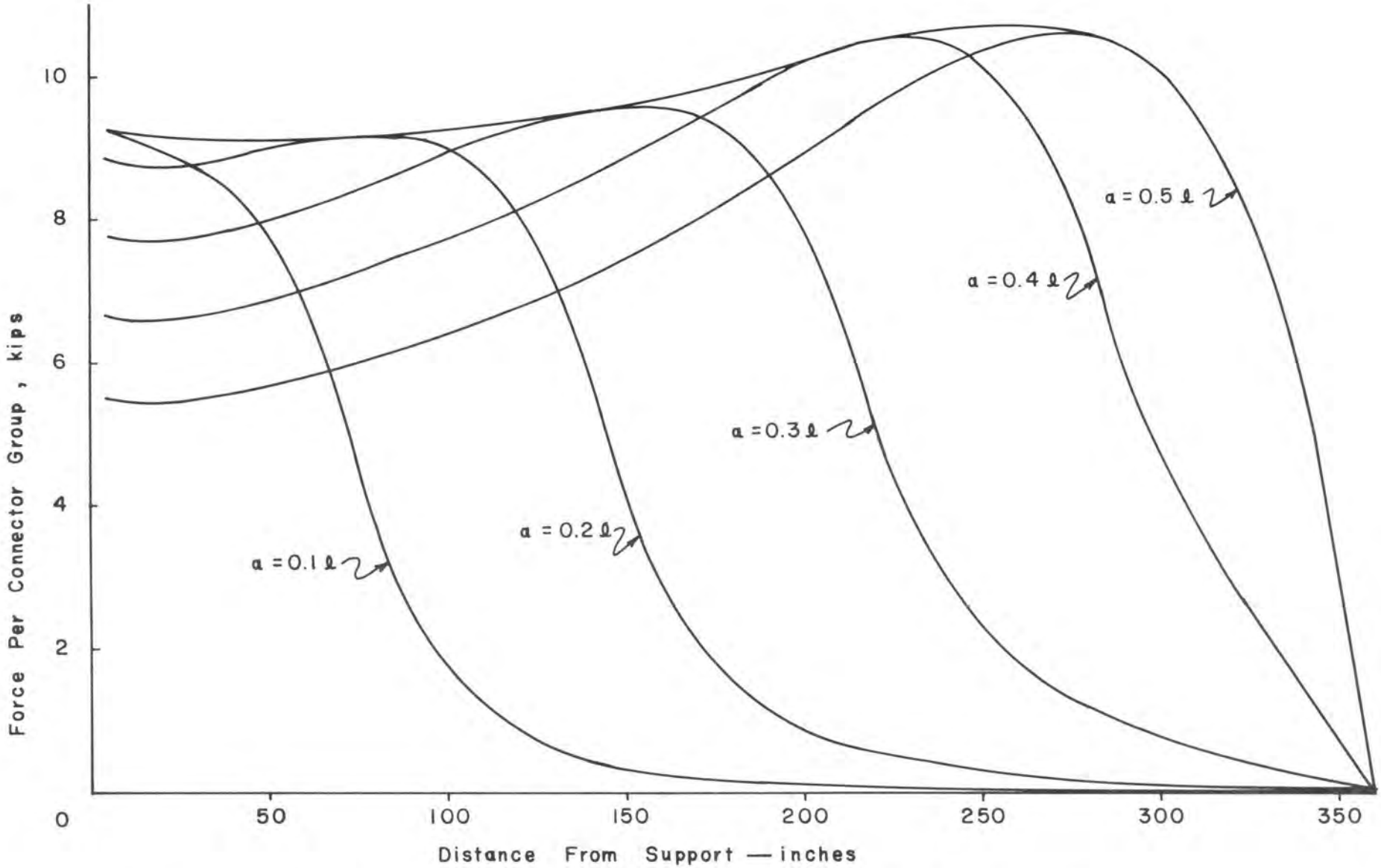

FIGURE 30 CONNECTOR FORCE DISTRIBUTION FOR SIMULATED MOVING LOAD

With the rigid connector analysis the number of connectors has an influence only on the shear connector forces while with the flexible connector analysis the number of connectors may have a marked influence on extreme fiber stresses and deflection. However, the large number of shear connectors currently required by the AASHO specifications is sufficient to make the interaction essentially complete so far as extreme fiber stresses and deflections are concerned. This was shown clearly in each of the design examples where in every case, the difference in deflection was less than 4 percent. In fact, a substantial reduction in the number of shear connectors would produce only small increases in steel stress and deflection.

Comparisons of the two analyses show that shear connector forces, however, are much more sensitive to the flexibility of the connection. Figures 28 and 29 show comparisons of influence lines for shear connector force as computed by the two methods. Figure 28 is the influence line for a row of three shear connectors located 236 inches from the support and Figure 29 shows the influence line for a row of three connectors located 65 inches from the support. In both instances the rigid connector analysis shows a sharp drop in the shear connector force as a load passes over the connector while the flexible connector analysis shows a much more gradual transition. From the nature of this gradual transition, it may also be deduced that in the case of a single concentrated moving load the negative shears are probably

much smaller than those predicted by the rigid connector analysis.

The flexibility of the connectors permits a distribution of the connector forces and tends to ease the sharp peaks. As a result, the maximum force to which a given connector is subjected is somewhat less than that predicted by the rigid connector analysis.

Figure 30 shows the distribution of shear connector forces along the beam for five positions of the moving load. Again, the transitions are much more gradual than would be predicted by the rigid-connector analysis. The maximum envelope of these curves, as shown in Figure 30, is the maximum connector force envelope for the connectors in the beam as the concentrated load passes across the beam. Figure 31 shows a comparison of this maximum connector envelope with that computed on the basis of rigid shear connectors. At every point along the beam the actual maximum shear connector force is less than that predicted by the rigid connector analysis. The difference ranges from approximately 5 percent near the end of the beam to more than 50 percent near midspan. This difference is even greater for short spans.

In general the overloading of any individual shear connector tends to be resisted by all of the connectors between that connector and the end of the span. Thus, in beams subjected to moving concentrated loads, peak forces on interior shear connectors are much lower than those predicted by rigid connector theory, while peak forces on shear connectors

near the end of the span are only slightly lower than those predicted by rigid connector theory.

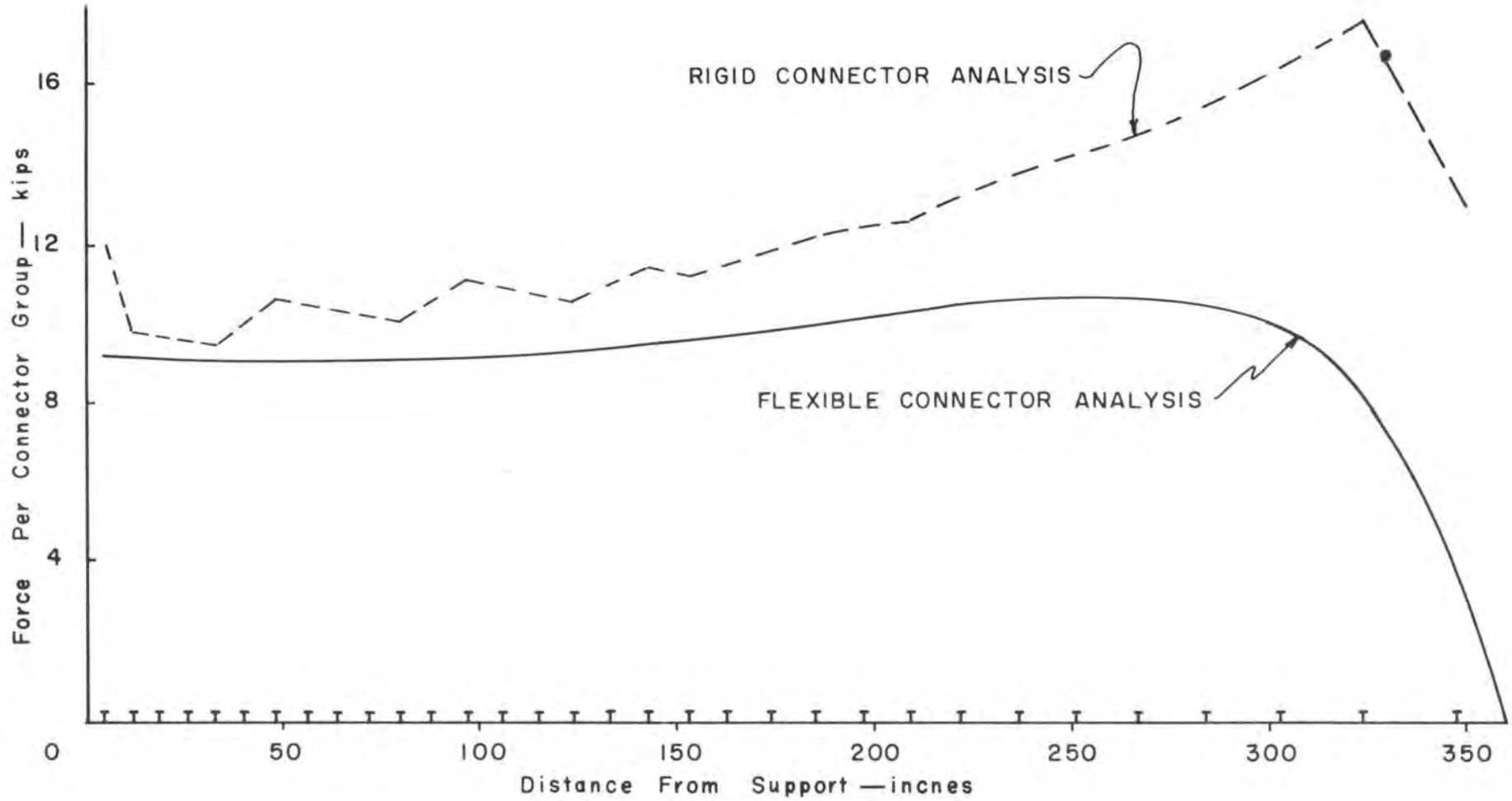

FIGURE 31 MAXIMUM CONNECTOR FORCE ENVELOPE

Chapter V

SUMMARY AND CONCLUSIONS

Through tests of 75 pushout specimens both the strength and load-slip characteristics of shear connectors were studied in detail. The load-slip equations developed in the first phase of the investigation were used to develop a rational analysis for concrete-on-steel composite beams. This analysis accounts for nonlinear flexibility in the shear connection, plastic deformation of the steel, and nonlinear stress-strain behavior of the concrete.

Eight beams were tested in the laboratory as a check for this analysis. The analysis was then used to study a number of typical bridge beams. Both load-deflection behavior and internal force distributions were considered.

From the findings of the project the following conclusions may be drawn:

(1) Shear connector strength may be governed by either the strength of the concrete or the strength of the steel in the stud.

(2) For steel failure the ultimate strength of a stud shear connector is given by the following equation

$$Q_u = \frac{\pi D^2}{4} f'_s \qquad (1)$$

(3) For concrete failure the ultimate strength of a stud shear connector is given by the following equation:

$$Q_u = 0.0157LDf'_{sp} + 6.80 \qquad (2)$$

(4) Shear connectors in lightweight concrete slabs have approximately 20 percent lower strength when equation 2 governs and substantially lower stiffness than shear connectors in normal weight concrete slabs.

(5) In composite beams with haunched slabs, shear connectors may have a lower strength than in slabs without haunches. Although in many cases this strength reduction may be negligible it is a factor which should not be overlooked in design.

(6) The rational analysis developed in this study can be used to predict the behavior of composite beams with a reasonable degree of accuracy.

(7) The behavior of composite beams fabricated with light-weight concrete slabs is similar to that of composite beams fabricated with normal weight slabs and the differences may be predicted from the differences in material properties.

(8) With the large number of shear connectors currently required by the AASHO specifications, the transformed section analysis used in current practice predicts steel stresses and deflections with a high degree of accuracy.

(9) In nearly all cases the transformed section analysis used in current practice gives shear connector force values which are higher than those actually present in a beam.

(10) The precise location of shear connectors is not critical. However, it is in general better to shift connectors toward the section of zero moment than toward the section of maximum moment.

(11) Although allowable values for shear connector strength were increased in the 1965 AASHO specifications, they are probably still more conservative than necessary.

A SELECTED BIBLIOGRAPHY

(1) Viest, Ivan M., "Review of Research on Composite Steel-Concrete Beams," Journal of the Structural Division, ASCE, Proceedings, Vol. 86, No. ST6, pp. 1-21, June, 1960

(2) Enke, G.L., "Welding to Ensure Composite Beam Action," Civil Engr., Vol. 14, No. 1, pp. 9-12, 1944

(3) Viest, Ivan M., and C.P. Siess, "Composite Construction for I-beam Bridges," Proceedings, Highway Research Board, Vol. 32, pp. 161-179, 1953

(4) "Standard Specifications for Highway Bridges," The American Association of State Highway Officials, 4th Edition, 1944

(5) White, A., "Summary of Composite Bridge Beam Questionnaire Survey," ACI Journal, Vol. 52, No. 9, pp. 1013-14, May, 1956

(6) Viest, I.M., R.S. Fountain, and C.P. Siess, "Development of the New AASHO Specifications for Composite Steel and Concrete Bridges," University of Illinois, Dept. of Theoretical and Applied Mechanics, Report No. 110, December, 1956

(7) "Standard Specifications for Highway Bridges," The American Association of State Highway Officials, 7th Edition, 1957

(8) Viest, I.M., "Investigation of Stud Shear Connectors for Composite Concrete and Steel T-Beams," ACI Journal, Vol. 27, No. 8, pp. 857-891, April, 1956

(9) Page, P.P. Jr., "New Type of Shear Connector Cuts Cost of Composite Construction," Engr. News Record, Vol. 156, No. 19, pp. 46-48, May 10, 1956

(10) Hooper, I., and J.G. Hotchkins, "Records for Composite Construction," Engr. News Record, p. 24, March, 1960

(11) Mayes, G.T., "New Steel and Composite Design," Civil Engr., pp. 66-68, April, 1962

(12) Garfinkel, A., "Composite Design Cuts Steel 20%," Engr. News Record, p. 44, August 20, 1959

(13) Dallam, Lawrence N., and Adrian Pauw, "Study of Composite Bridge Stringers," Interim Report-Cooperative Research Project, Missouri State Highway Commission and U.S. Bureau of Public Roads, August, 1963

(14) Baldwin, J.W., and K.E. Buttry, "Behavior of Stud Shear Connectors in Lightweight and Normal-Weight Concrete," Missouri Cooperative Highway Research Program Report, 1966

(15) Baldwin, J.W., and Sankar Das, "Shear Connections in Haunched Composite Members," Missouri Cooperative Highway Research Program Report, 68-1, 1968

(16) Baldwin, J.W., J.R. Henry, and G.M. Sweeney, "Study of Composite Bridge Stringers Phase II," Missouri Cooperative Highway Research Program Report, 1965

(17) Proctor, Melvin H., "Analytical and Experimental Study of Lightweight Concrete-Steel Composite Beams," Masters Thesis, Dept. of Civil Engr., University of Missouri, August, 1963

(18) Dallam, L.N., "Bibliography of Composite Concrete-Steel Beams," Missouri Cooperative Highway Research Program Report, 68-5, 1968

(19) Dallam, L.N., "Design of Shear Connectors in Composite Concrete-Steel Bridges," Missouri Cooperative Highway Research Program Report, 67-7, 1967

MoDOT Library
RD0016306