MoDOT
TE
153
.D4
1981
c.2

MISSOURI COOPERATIVE HIGHWAY RESEARCH PROGRAM
FINAL REPORT

80-2

DEVELOPMENT OF A SYSTEM FOR PHOTOGRAPHY OF UNDERGROUND OPENINGS THROUGH DRILLED HOLES

Property of
MoDOT TRANSPORTATION LIBRARY

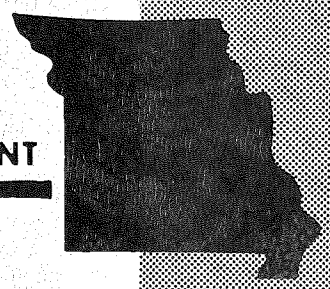

MISSOURI HIGHWAY AND TRANSPORTATION DEPARTMENT

FEDERAL HIGHWAY ADMINISTRATION

DEVELOPMENT OF A SYSTEM FOR PHOTOGRAPHY OF UNDERGROUND OPENINGS THROUGH DRILLED HOLES

STUDY NO. 80-2

Prepared By

MISSOURI HIGHWAY AND TRANSPORTATION DEPARTMENT

Division of Materials and Research

Final Report
March 1981

in cooperation with

U.S. DEPARTMENT OF TRANSPORTATION

Federal Highway Administration

The opinions, findings and conclusions expressed in this publication are not necessarily those of the Federal Highway Administration.

ABSTRACT

Based upon experience gained from a prototype system and from field trials, an inexpensive photographic system and relatively simple techniques were developed for securing photographs of mines and caverns accessed through nominal 6-inch diameter boreholes. Techniques were developed for determination of distances and mapping of cavities using continuous circumferential stereoscopic coverage from a single borehole. Problems experienced with underwater photography led to the adaptation of a marine depth finder as a supplement to photography for surveying water filled cavities.

TABLE OF CONTENTS

	Page
Introduction	1
Conclusions	3
Implementation	4
Scope	5
Down-Hole Photographic Equipment	7
Photographic Interpretation and Survey Techniques	18
Field Tests	24
Supplemental Sonar Surveys	34

LIST OF FIGURES

Figure		Page
1.	Konica FS-1 Camera	6
2.	Various Protective Camera Housings	11
3.	Rod Coupling Details	14
4.	Table for Support and Orientation of Rods	15
5.	Center Element of Rod Support Table	17
6.	Calibration Curves for Interpretation of Distance Using Stereo Pairs	21
7.	Identification and Record Form for Down-Hole Photography	23
8.	Examples of Stereo Pairs From the Cave Investigation.	26
9.	Sketch of Cavern Based Upon Distances Determined From Stereo Pairs	27
10.	Portion of Circumferential Stereo Coverage Obtained From the Coal Mine Investigation	28
11.	Another Portion of Circumferential Stereo Coverage Obtained From the Coal Mine Investigation	29
12.	Sketch of the Coal Mine Chamber Based Upon Distances Determined From Stereo Pairs	30
13.	Sketch of Water-Filled Mine Chamber Based Upon Distances Determined From Stereo Pairs	32
14.	Depth Finder With Transducer Mounted for Down-Hole Use	37
15.	Sonar Graph and Interpreted Coal Mine Chamber Outline	38
16.	Sonar Graph and Interpreted Lead Mine Chamber Outline	39

INTRODUCTION

Voids created by underground mining as well as natural caverns have the potential for subsidence and collapse in many areas where highways must be built. It is difficult and expensive to determine the size, shape and structural integrity of such cavities by drilling alone. Physical entry for inspection may be impossible and will be hazardous at best.

Such problems have pointed out the need for a photographic or other survey system which could be lowered through drilled holes to document underground openings so that better informed judgements could be made about the danger of collapse and subsidence and the need for expensive corrective action. A literature search revealed little information of a specific nature although Lundgren, Sturges and Cluff(1) provide a useful overview of the subject.

The primary objectives of this study were to develop and field test a low cost system for photographing such cavities through boreholes, using commercially available or easily constructed components, and to assess problems of interpretation of the imagery.

Commercially available borehole cameras, both film type and video, were judged unsuited for the intended purpose since such cameras are primarily designed for photographing the borehole itself rather than large openings which may be accessible only through the borehole. Moreover, such systems are extremely expensive. For the intended purpose, adaptation of standard film type cameras appeared to offer maximum economy, greatest potential for application of photogrammetric techniques to image interpretation plus the ability to record images at the greatest distances.

As a result of problems experienced in the field tests

with underwater photography the study was also extended to an evaluation of the feasibility of using a sonar device as a supplemental means of surveying water-filled cavities beyond the range of photography.

CONCLUSIONS

1. The photographic survey system developed is capable of achieving high quality photographs in air-filled cavities by access through nominal 6 inch diameter boreholes. Objects can be photographed to distances of at least 30 to 40 feet through proper control of the camera, the light system and processing of the film.

2. By securing overlapping coverage on selected vertical offsets, stereoscopic study is possible and object distances can be computed with an accuracy adequate for mapping of most cavities without additional subsurface controls.

3. The ability to obtain underwater photographs of usable quality is limited by the clarity of the water and, in any case, to much shorter distances than in air.

4. A recording sonar device, adapted from a commercially available depth finder, proved useful in surveying water filled cavities at distances beyond the effective range of the camera. The application of sonar to subsurface investigation is an area deserving of further research.

5. Also deserving of further development is a low cost photographic system capable of operating through boreholes as small as 3 inches. For minimal cost, such a system must await marketing of a compact, high quality camera using 16mm or 110 film and having an integral motor drive.

IMPLEMENTATION

This study has been implemented in a practical means concurrently with the progress of the study. All of the field trials were performed in underground openings of immediate concern to the Department. The information obtained has been used for guidance in filling an abandoned lead mine as part of an active construction project, as the basis for a decision to collapse a cavern roof on a future project and to initiate a program of continuing surveillance of old coal mines beneath another roadway.

The availability of the developed and acquired equipment is expected to substantially reduce future drilling costs for exploration of underground mines and cavities while greatly enhancing the quality of the information available for decision making.

SCOPE

Initial experience was gained by building a low-cost prototype system using materials already on hand. Criteria were developed for the camera needed as well as other system components. Available cameras were surveyed and the model judged most suitable purchased. Field trials led to development of a series of camera housings. Photogrammetric techniques were adapted to permit computing object distance from stereoscopic coverage obtained by overlapping coverage from selected vertical camera intervals. As a result of problems experienced with underwater photography, a sonar device was purchased and evaluated for surveying water-filled chambers beyond the effective range of the camera.

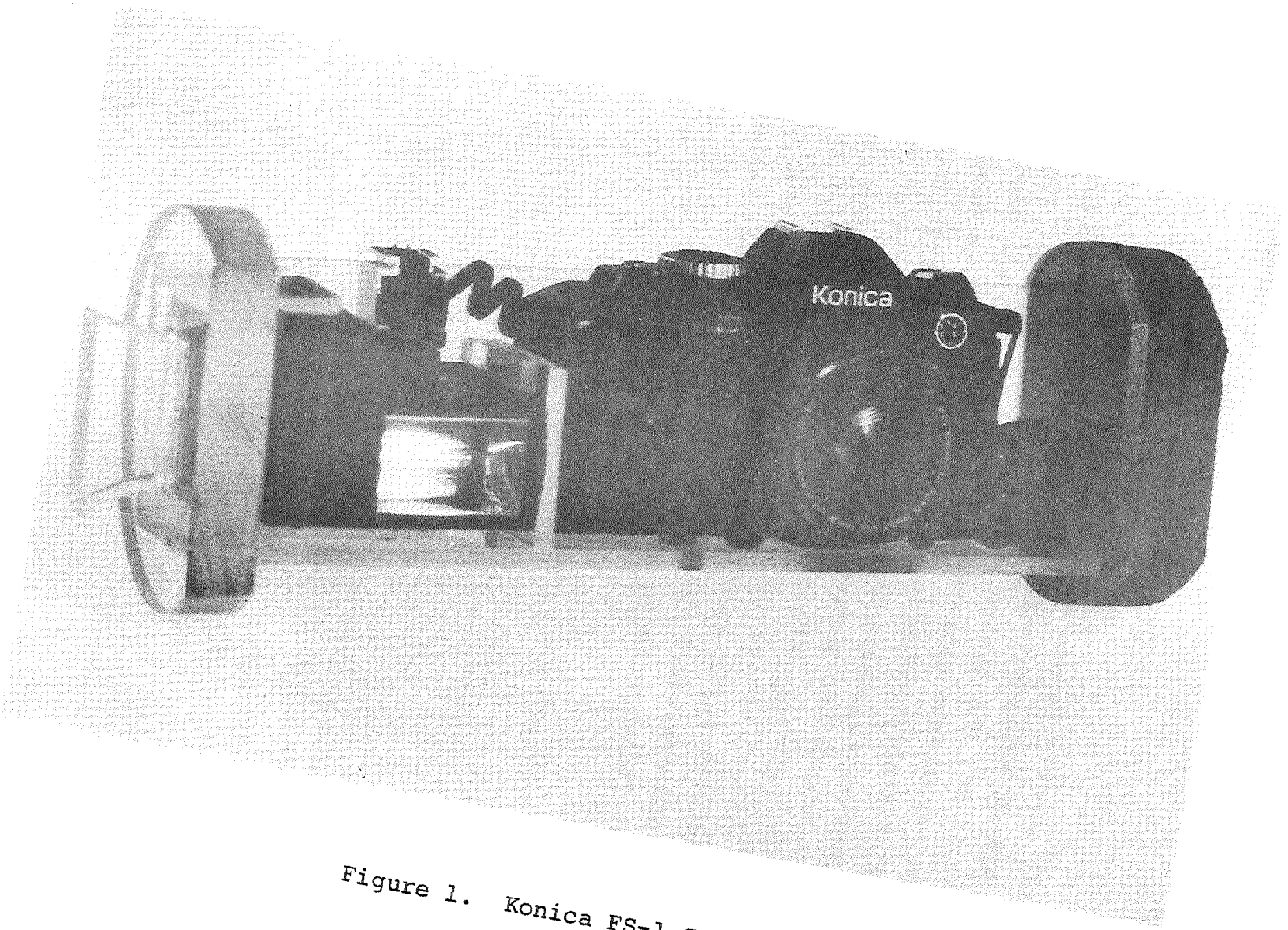

Figure 1. Konica FS-1 Camera

DOWN-HOLE PHOTOGRAPHIC EQUIPMENT

Valuable initial experience was gained by first building and using a prototype system, at virtually no materials cost, using equipment already owned. This confirmed some previous judgements and furnished new insights into the type of photographic equipment needed and the procedures which would have to be developed. Moreover, an appreciation was gained of some of the requirements of the other components of the complete system.

Camera. A suitable camera, in addition to being mechanically rugged and optically adequate, must necessarily possess certain unique characteristics for down-hole use. These include, not necessarily in order of importance: (1) capacity for a large number of exposures to minimize the number of trips in and out of the hole; (2) a motor drive for automatic film advance; (3) smallest practical size to reduce borehole size and cost; and (4) adaptability to remote operation. In addition, the camera should be reasonably priced because of the ever-present danger of loss or damage associated with down-hole use.

The restrictions on camera size are inherent in the escalating costs of drilling larger holes. The Department's drills customarily use a nominal 6 inch rock bit through soil overburden to rock, at which time 3½ inch i.d. casing is set and the hole advanced in rock with an NX diamond core barrel, leaving a nominal 3 inch diameter hole. However, 8 inch rock bits and 6 inch i.d. casing are also stocked and, if necessary, the 3 inch diamond core hole can be reamed to 6 inches. Thus, 6 inches was established as the largest practical hole size through which to operate without need to purchase new drilling equipment and incur prohibitively high drilling costs.

Photographic equipment capable of being lowered through both the 3½ inch i.d. casing and the 3 inch diamond core hole

would be the most desirable from the standpoint of reducing drilling costs to a minimum. However, no commercially available camera was found which met the desired criteria. The Pentax Auto 110 perhaps came closest except for the bulk of its external motor drive. Some thought was given to attempting to customize this drive for offset use through a chain and sprocket arrangement. Constructing a system for the 3 inch diameter borehole remains an unrealized goal but one which could easily be met should a compact, high quality camera using 16mm or 110 film be marketed with an integral motor drive.

Within the limits of the 6 inch hole size, space is required for enclosure of the camera within a protective housing and substantial clearance is required between the housing and the walls of the borehole which can be irregular and subject to dislodgement of loose particles. The practical dimensional limitation for the camera thus becomes on the order of 4 to 4½ inches in any cross-sectional direction, length excepted. In the prototype system built with equipment on hand, an Olympus EEM camera was used. This camera, no longer sold, was originally purchased at a cost of $39 to record instrument readings during untended night-time soil tests. It is compact in size and has a built-in electric motor-drive. Limitations included the 12 exposure 126 film cartridge used, the lack of an electrical shutter release and, after years of use, frequent mechanical and electrical problems. Although much useful information was gained from its use, it was quickly judged inadequate for routine down-hole use.

At the time of purchase, only one camera was found which appeared to meet the criteria developed for the intended use without modification. This camera, then a new model just becoming available, was the Konica FS-1, a 35mm single lens reflex camera with an integral motor drive which did not increase camera height. The FS-1 had two other unique features which

led to its selection: provision for electrically operated remote shutter release and a standard 40mm f1.8 lens which is moderately wide angle and very compact, extending only 1.1 inch from the body. This lens provides 33 degrees of horizontal coverage in air and 24 degrees underwater when the camera is aligned vertically. Modern Photography (2) reported this lens to be among the best in resolution that it had ever tested regardless of price. Purchased at a price of $373, the camera and lens have recently been advertised at about $100 less. The camera is shown in Figure 1 in a mount for use within a protective housing.

Some problems were experienced with the camera in the form of internal electrical shorts which led to complete battery drain. The original camera body was eventually replaced by the vendor under warranty. Subsequently, problems were also experienced with the shutter speed and automatic flash synchronization on the replacement body. The camera is currently being repaired at a factory service center.

Film. Although experimental use was made of color print film, nothing but black and white was ever seriously considered for routine use because of its low cost and the fact that the Department's photo lab was equipped to process and print only such film. In the prototype system, 12 exposure 126 cartridge film was used. A major deficiency was inability to obtain complete circumferential coverage with only 12 exposures. With the Konica, 36 exposure Tri-X (400 ASA) film cartridges were used initially. This film permitted not only a complete circumferential coverage but stereo coverage as well by overlapping exposures on a short vertical offset. At about this time, a thin polyester base film, Ilford HP-5, also 400 ASA, became available in 72 frame cartridges, permitting as many as three complete circumferential stereo coverages without withdrawal from the hole. This film proved satisfactory and was used in most subsequent field trials.

Protective Housing. Few cameras would survive many trips in and out of a borehole unprotected. The physical abuse from contact with rusty casing, rough rock walls and dislodged rock particles would soon destroy them. Moreover, the moist air, dripping water, mud and clay routinely encountered would quickly cause mechanical and electrical problems. A water-tight housing provides protection from these elements, as well as mine gasses which could be ignited by an electrical spark, and also permits underwater photography. Not least of all, the housing provides a rigid mount which assures alignment of the camera and flash with the rod string.

Several housings were constructed. In the prototype system, strips of Plexiglas were glued together into an elongated rectangular box with one removable end piece held by machine screws. Despite use of silicone grease and a plate gasket, this box was not reliably waterproof. It was suitable for damp or wet environments but not for prolonged immersion. This housing is shown as item A in Figure 2.

Another housing developed for use underwater utilized a Plexiglas plate window set into a 5 inch diameter, ¼ inch wall Plexiglas cylinder with a thick, friction fit base plate equipped with an O-ring seal. Because it would be immersed in over 60 feet of water, allowance for leaks was provided in the form of some 24 inches of water storage capacity below the camera and flash. This precaution was well founded as minor leaks were common. Fortunately, no more than a few inches of water ever accumulated. This housing is shown as item B in Figure 2 as it appears after shortening, to provide only 6 inches of space for water storage, for use in coal mines with limited vertical clearance.

Other successfully waterproofed housings constructed are shown as items C and D in Figure 2. The largest utilizes an 18 inch length of 5 inch diameter, ¼ inch wall Plexiglas

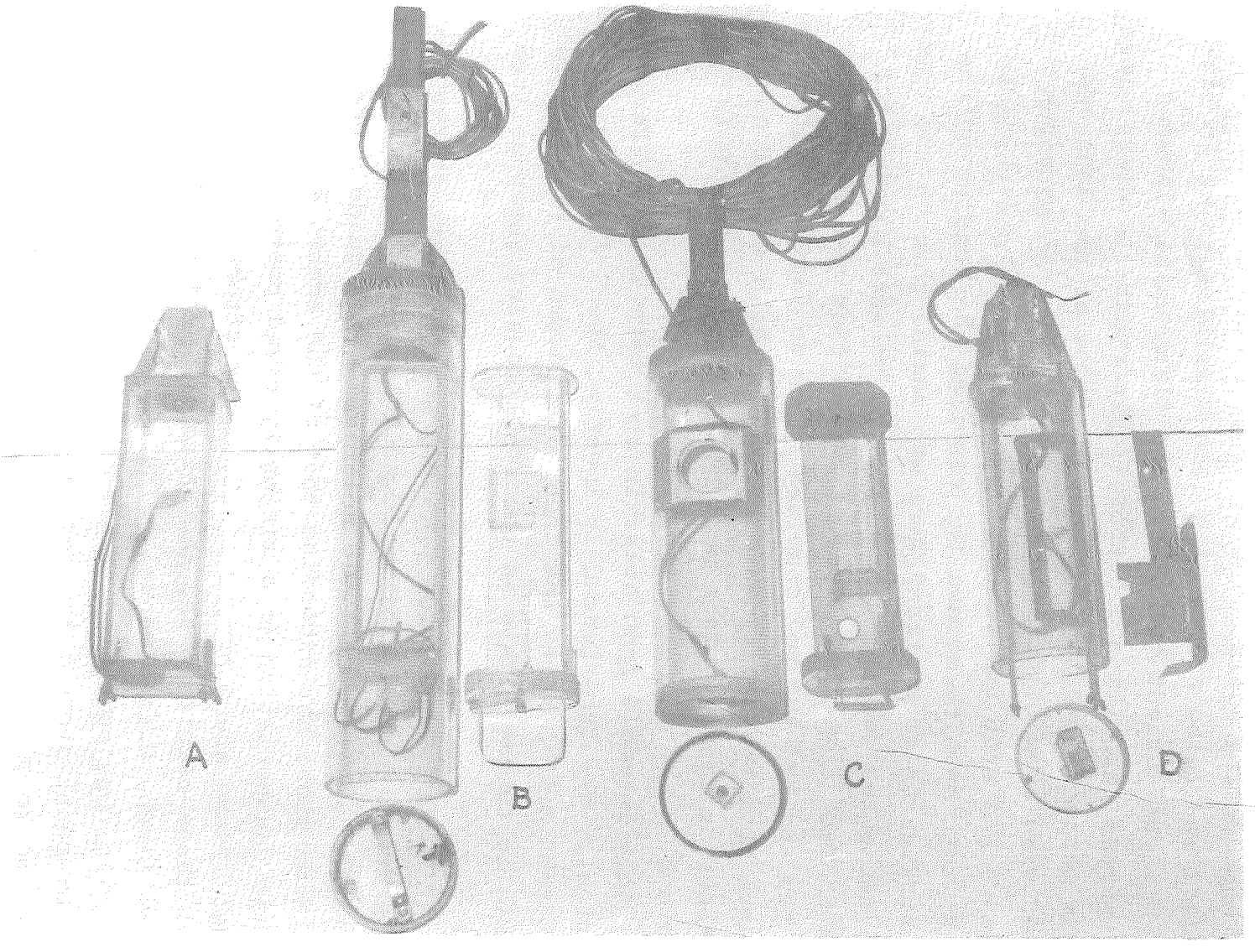

Figure 2. Various Protective Camera Housings

cylinder, internally threaded at each end to receive threaded caps with O-ring seals. The internal camera mount was constructed by gluing pieces of ¼ inch Plexiglas so as to rigidly hold and orient the camera and flash while allowing easy access for film and battery replacement. A plate glass window was set into the cylinder in front of the lens and sealed with auto windshield mastic sealant. An aluminum plate with a stub rod section was attached to one threaded cap by four machine screws for coupling the housing to the rod string. A four strand wire was sealed through the upper cap, two wires for the remote shutter release and two for a water leak detection circuit. Guide fins are attached to the top end cap and rod coupling so as to facilitate retrieval from the cavity into the access hole without catching on rocks or casing. This housing is shown as item C in Figure 2.

Some reamed 6 inch holes in rock were so irregular that difficulty was experienced in lowering the 5 inch o.d. housing. A 4½ inch o.d. housing was then constructed of 1/8 inch wall Plexiglas tubing. This is the small housing shown as item D in Figure 2.

Lighting. Desirable criteria for the light source include low battery drain, rapid recycling, optional automatic or manual exposure control, relatively high guide number and dimensions not exceeding that of the camera so as to permit encapsulation in a minimally sized protective housing. There are a number of thyristor strobe units which meet these requirements. A Konica X-24 Autostrobe dedicated flash, with a manual guide number of 160 with 400 ASA film, was purchased at a cost of $66. However, the $30 discount store brand used with the prototype system appeared to give equally good performance. To minimize cross-sectional dimensions, the flash unit was connected to the camera body by a PC cord rather than at the hot shoe and aligned vertically above the camera in the housing.

Shutter Release. The Konica FS-1 camera is equipped with a receptacle for an electrical remote shutter release. A three foot long Konica cable release, referred to as a "Short Cable Switch", Part #705-322, was purchased for $18.00. This release worked satisfactorily when the cable was extended with 100 feet of plastic coated, 24 gauge stranded speaker wire.

Extension System. The prototype system made use of sections of 3/4 inch diameter electrical conduit coupled with modified conduit screw connectors. This system left much to be desired, being somewhat wobbly and the round rods not being conducive to control of camera orientation. This experience led to the choice of 1½ inch square (1/8th inch wall) aluminum tubing for the rods in the system as finally developed. Rod couplings were made of 6 inch lengths of 1 3/4 inch square (1/8th inch wall) aluminum tubing lapped 3 inches over the ends of the rod sections and welded at one end. Rod sections were fastened together with steel taper pins in turn secured by snap pins (see Figure 3). This square rod system greatly facilitated control of camera orientation. The taper pins could only be placed from one direction assuring constant alignment of the housing and rods in the rod string.

The maximum depth of use anticipated was approximately 100 feet. Eleven rods of 10 foot length and two rods of 5 foot length were constructed for a total rod length of 120 feet. The total weight of the housing and the complete rod string is about 120 lbs. When used underwater, buoyancy, acting principally on the camera housing, reduces this weight significantly.

Support Table. In the prototype model, rod support and camera orientation were accomplished using a foot stool with a hole drilled in the center and a compass rose inscribed with a felt-tip pen. The rods were held and

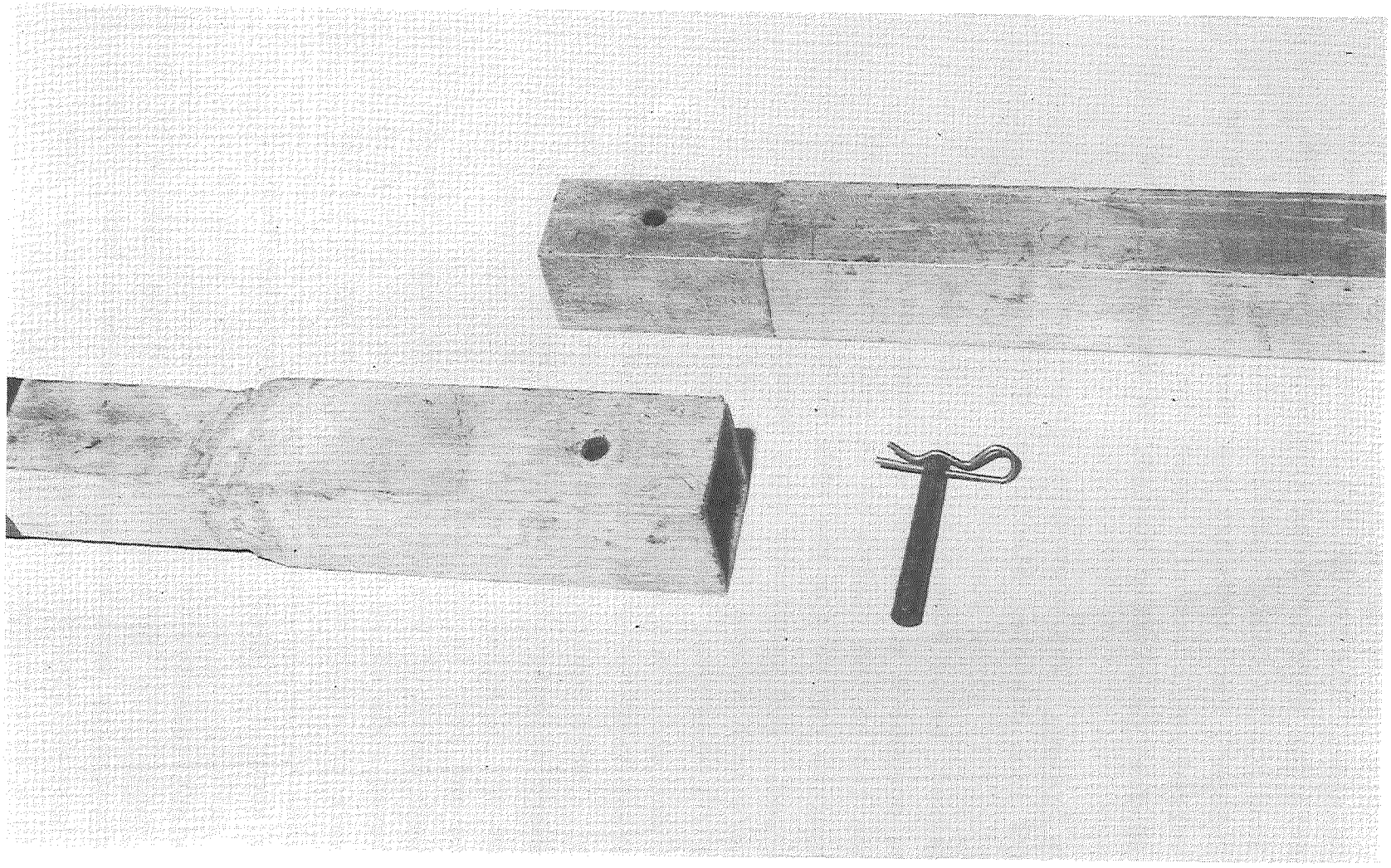

Figure 3. Rod Coupling Details

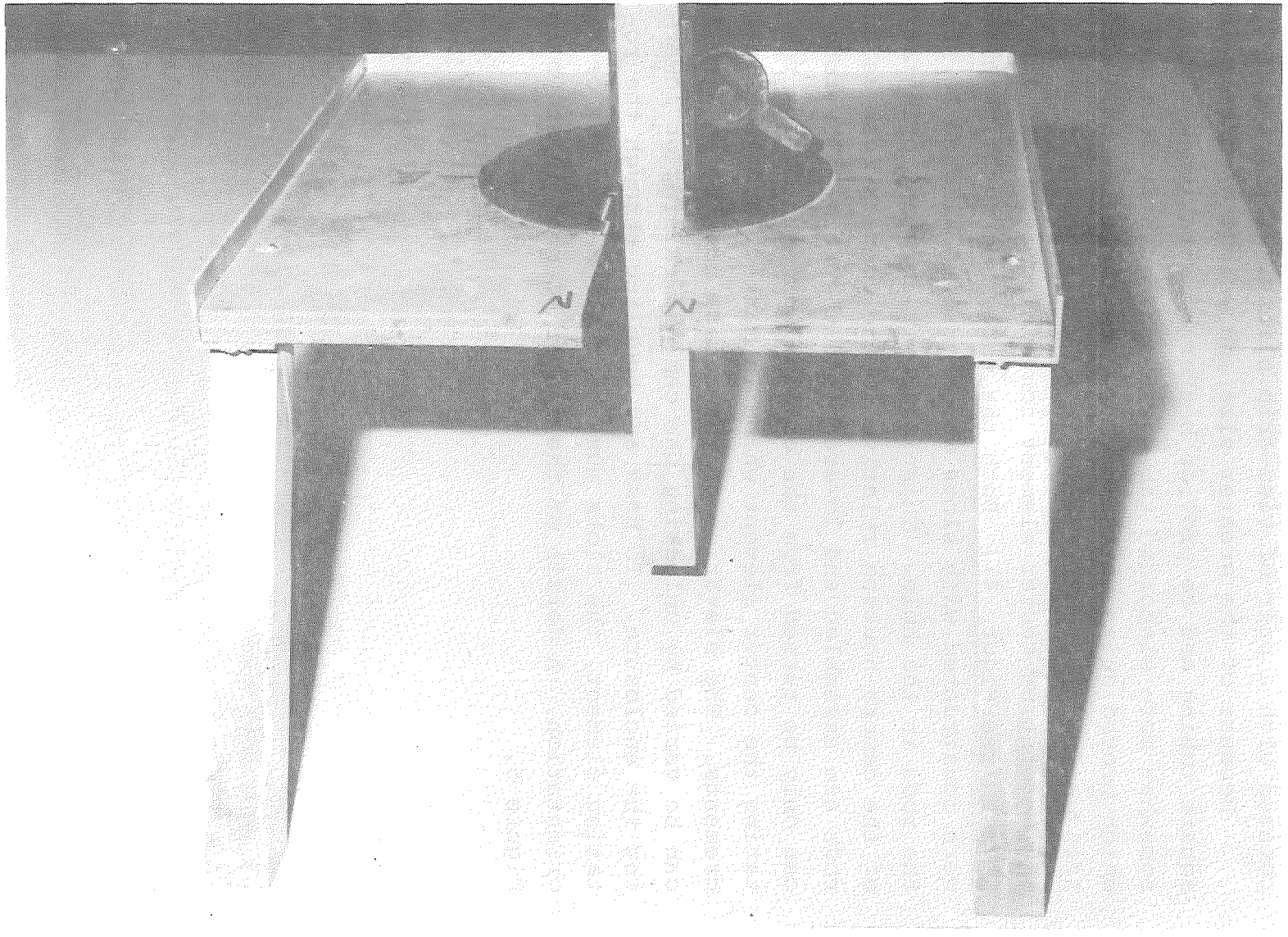

Figure 4. Table for Support and Orientation of Rods

rotated with a pair of vise-grip pliers.

Because of the greater size and weight of the 1½ inch square tubing and to provide better orientation control, a somewhat more elaborate table was subsequently designed which proved quite satisfactory. The table was built of 3/4" marine plywood framed with square aluminum tubing and a rotating center element containing a cam rod locking device (see Figure 4). Both the table and rotating element were constructed with slots which must be aligned to place the rods in the hole. This insures a constant orientation of the camera housing relative to the compass rose as the rods are assembled and lowered into the hole. The rods can only be turned from the original orientation by rotating the center element which is marked in degree increments. The elevation of the camera housing in a cavity can be varied by unlocking the cam and raising or lowering the enclosure. To pass any coupling through the rotating element, the slots must be realigned in the original orientation. A detail of the center element is shown in Figure 5.

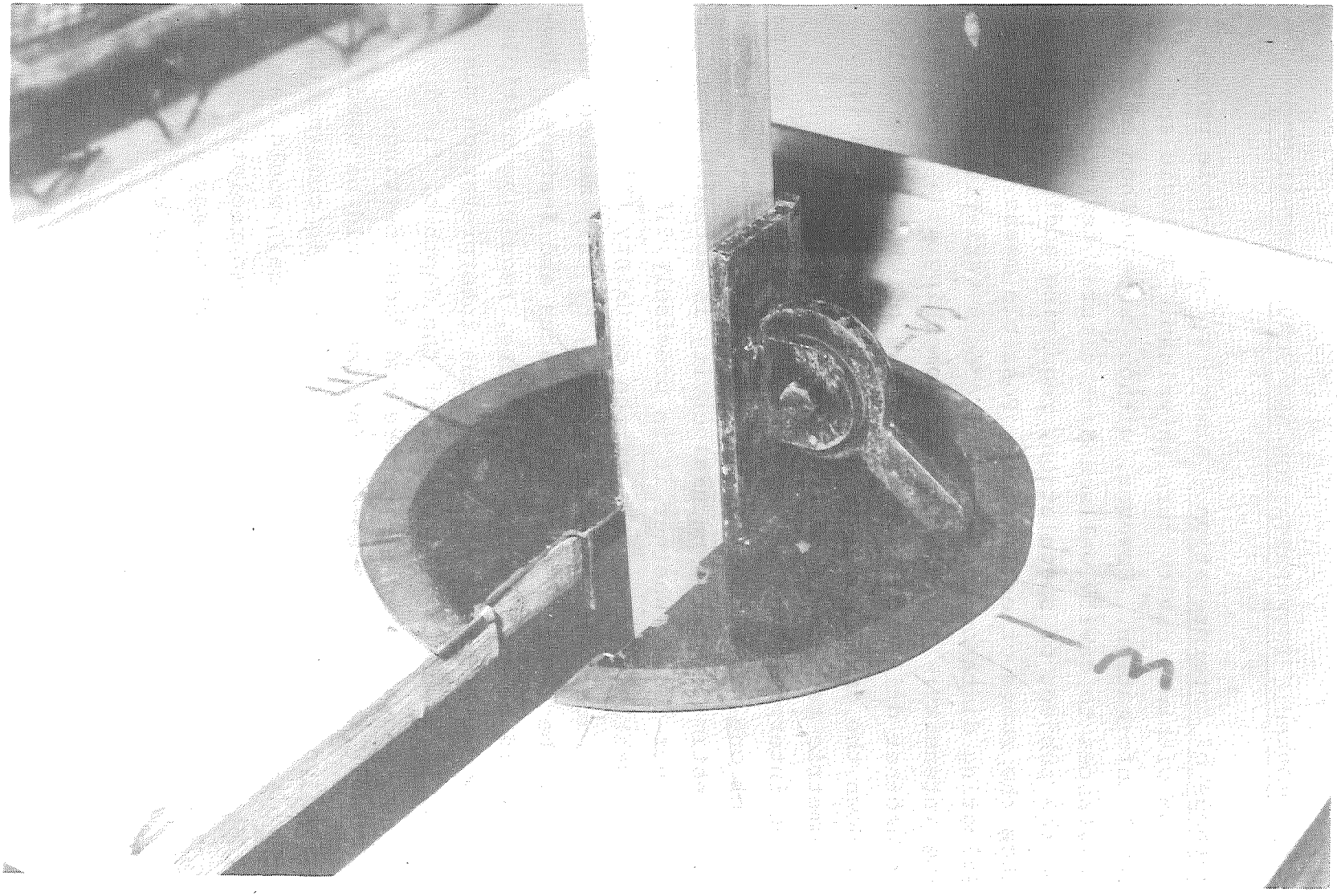

Figure 5. Center Element of Rod Support Table

PHOTOGRAPHIC INTERPRETATION AND SURVEY TECHNIQUES

Methods of Interpretation. Almost all down-hole photographs from within a cavity furnish valuable geologic and structural information. However, without some method of measurement, distances to cavity walls and structural features can only be the subject of speculation, requiring additional drilling to reduce the range of estimation. Possible means considered for estimating distance include: (1) focus variations; (2) lighting intensity; (3) reference to something at a known distance, such as another drill hole, or to objects of known size perhaps dropped down the drill hole for random scattering; and (4) photogrammetric techniques based on stereo pairs.

Focus interpretation seemed at best a crude way to estimate distance but one not without value. For example, it could suffice to estimate that a natural cavity is actually a crevice only a few feet wide. Whether it is precisely 2.9 or 4.1 feet wide is not nearly as important as the certainty that it is not 30 or 40 feet wide. To increase accuracy by this method, exposures could be repeated with varied focus and f-stops. However this would be a cumbersome procedure, requiring multiple trips in and out of the borehole. Focus interpretation must in any case be based on a knowledge of the depth of field range of the lens used at various aperture and focus settings.

Similarly, relative lighting intensity could be used for subjective judgements of distance, preferably in combination with other indicators such as focus. This again would require a knowledge of the equipment tempered by an appreciation of the degree to which light absorption and reflection may vary with the varicolored and unidentified materials to be encountered underground.

It seemed apparent that a reasonable degree of accuracy in distance determination could only be obtained by using

photogrammetric techniques based on stereo pairs, overlapping photographs taken from slightly different locations with the camera offset accurately measured. In down-hole photography, this camera offset between stereo pairs can only be provided and measured as a vertical interval. The interval can be increased as desired to exaggerate the stereo effect and provide greater accuracy in measurements at greater distances. In field trials, a vertical interval of 6 inches was found generally suitable, especially for initial surveys. The interval was sometimes increased on repeated surveys to 12 and even 24 inches. Where stereo could not be achieved with a 6 inch offset, the cavity walls were judged so close as to represent no structural problem.

Distance computations were based upon the interrelationships between object distance and focal length on the one hand and the camera offset interval and relative image displacement on the other. Measurements were made of the vertical image displacement between the two photographs comprising a stereo pair relative to the top or bottom edges of the two pictures. Normally, measurements were made from enlargements, with care taken that the entire negative including the frame edge was printed without cropping. A microscope and measuring reticle were also used with negatives but prints were most convenient and were also needed for stereoscopic study.

Distance (d) was computed as equal to the camera offset interval (C0) times the lens focal length (f) divided by the image offset interval (I0) in turn divided by any enlargement factor (F) or, d = (C0 x f) / (I0/F). For example, with a 40mm lens, a 12 inch camera offset between the stereo pair and a one inch relative image offset on prints enlarged 10 times, the object distance would be computed as follows:

$$d = \frac{12\text{in} \times 40\text{mm}}{1\ \text{in}/10} = 16 \text{ feet}$$

When used in a housing with a Plexiglas or glass plate before the lens, and particularly when used in water, the indices of refraction of these materials must be taken into account. The former has an insignificant effect while the latter is quite significant. These effects were computed theoretically and then confirmed by field calibration for the 40mm f1.8 lens in its housing, both in air and immersed in a swimming pool. This calibration, adjusted for a 6.7 enlargement factor is shown as Figure 6.

It will be readily recognized that the simplified procedures described here are not highly precise. Errors of ± 10 to 20 percent are entirely possible. However, this is infinitely more accurate than could be estimated without photography and should suffice, in most instances, for the purpose intended. Greatest accuracy will be achieved with measurements made from images nearest the centers of the photos. Also, as the calibration curves indicate, accuracy drops off rapidly beyond 20 to 30 feet with a 12-inch camera interval. For better accuracy at greater distances, the cavity should be resurveyed on a larger interval.

The stereoscopic study possible from the overlapping coverage seemed to be almost as useful as the ability to compute distance. Certainly it facilitates mapping, permitting sketching between measured points. Some disorientation may be initially experienced since the viewer always appears to be looking sideways at the cavity.

Survey Techniques. The photographic survey technique followed was to rotate the camera clockwise through 360 degrees at constant elevation with individual pictures taken sequentially from magnetic north at constant degree intervals so as to give overlapping circumferential coverage. To obtain stereo, the rod string was then raised or lowered precisely 6 or 12 inches and the circumferential coverage repeated at indentical degree intervals so as to provide vertically overlapping coverage. However, with the

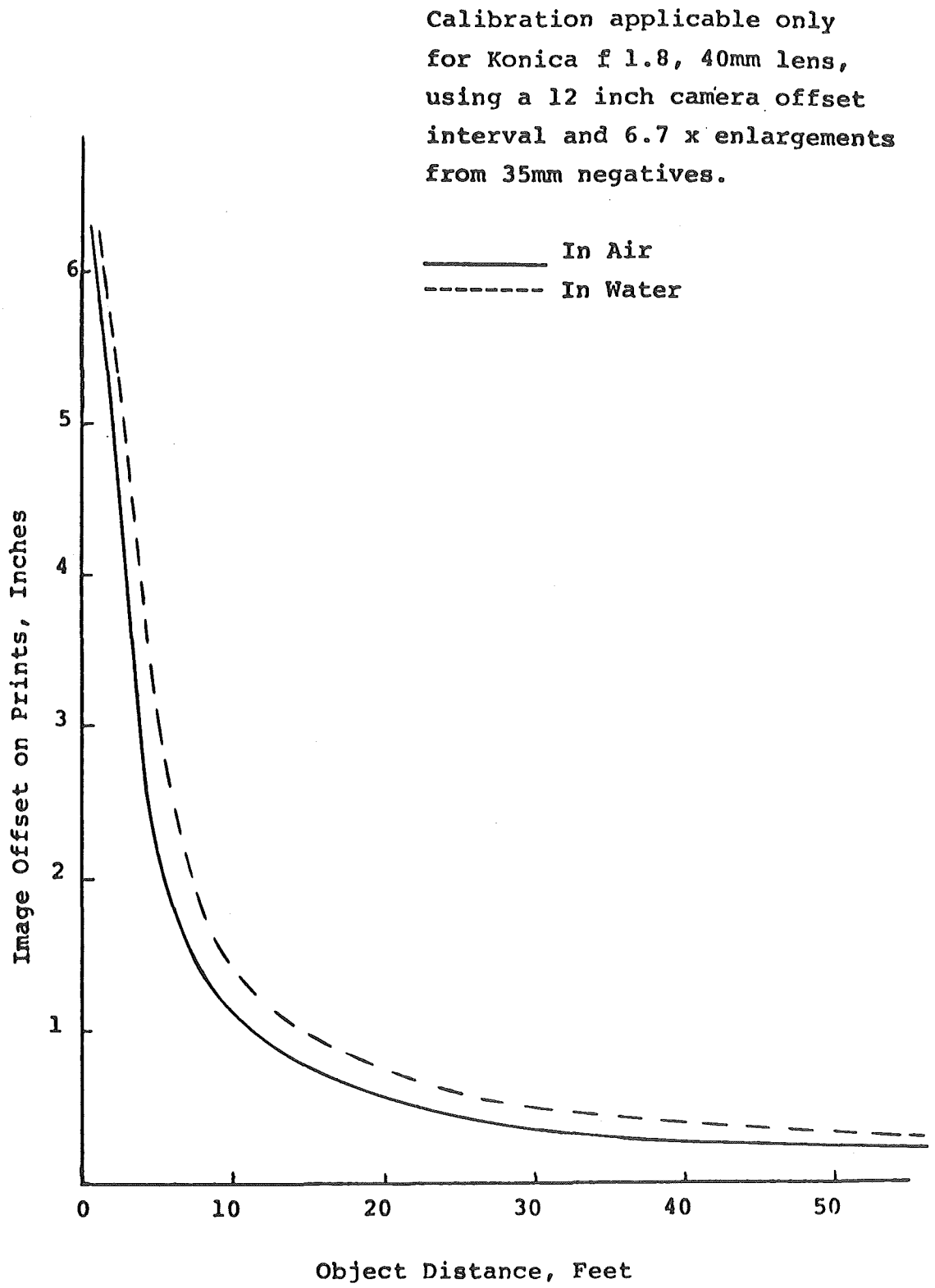

Figure 6. Calibration Curves for Interpretation of Distance Using Stereo Pairs

72 frame Ilford cartridge, as many as three complete stereo coverages could be obtained at varying depth intervals in air and two in water without withdrawing the camera from the hole.

Accurate records of each photographic survey were found to be essential as well as consistent conventions of use. The compass table and the first photograph were always oriented to magnetic north, the rotation always clockwise, the degree increment always the same, etc. Figure 7 is a form developed to record information needed for each roll of film exposed.

Lighting control deserves special mention. In some instances, automatic control of the flash duration may be preferable, for example when making an initial survey where object distances are unknown. In most cases, however, manual control was used. In wide chambers of shallow depth the automatic sensor can cut the flash duration too short to permit proper exposure of distant objects. In very wide chambers of any depth, only manual control will permit the maximum flash duration needed.

Coupling of two strobe units was done to increase light intensity. However, it was judged simpler to "force" the film to a higher effective ASA through manipulation of processing. In very large chambers, both techniques could be combined if necessary.

DOWN-HOLE PHOTOGRAPHIC SURVEY

IDENTIFICATION SHEET

Co. _____ Rte. _____ Job _____ Sta. _____

Surface Elev. _____ Photographer _____ Date _____

General Loc. _____

Camera _____ Housing _____

Flash Model _____ Guide No. _____

Film Type _____ No. Exp. _____ ASA _____

Roll Id.No				
Flash				
Shutter				
Focus				
f stop				
Depth				
Photo No. & Orientation				

Notes:

Figure 7. Identification and Record Form for Down-Hole Photography

FIELD TESTS

Limestone Cavern. The initial field test was conducted at a time when only the crude prototype system, previously described, was available for use. This trial revealed many shortcomings with the equipment but also produced some spectacular pictures which generated a great deal of interest in such photographic surveys.

The presence of numerous sinks in the area of a proposed interchange led to a preliminary electrical resistivity survey which revealed electrical anomalies interpreted as cavities. Several drill holes encountered voids up to 16 feet deep but did little to define the horizontal limits of the cavern system.

Holes which had penetrated limestone bedrock into the cavern were reamed out to 6 inches in diameter. The prototype system, as previously described, consisted of an inexpensive Olympus EEM camera with integral motor drive using 12 exposure 126 film, a discount store automatic flash, a water resistant but not waterproof camera housing assembled from sheet Plexiglas, a rod string of electrical conduit and a foot stool used for a rod support and compass table. The camera was triggered by pulling a string to activate a spring loaded cam.

Use of this assembly was slow and cumbersome with numerous trips in and out of the hole to change film, replace batteries, adjust focus, etc. With only 12 exposures, it was not possible to obtain complete circumferential coverage on a single film cartridge. Instead, 12 equally spaced intervals were employed, leaving small "holidays" between individual pictures. On a return trip after a weekend rainstorm, the camera housing was reinserted into a cavity newly filled with water. The camera and flash were soaked but were salvaged after disassembly, drying and cleaning.

A broken drill rod left in one drill hole was visible from other holes where photos were taken and gave a means of confirming photo orientations and distances calculated from the relative image offsets on stereo pairs.

Examples of the photographs obtained and a sketch of the cavern drawn from them are shown in Figures 8 and 9.

Coal Mines. A roadway undermined at depths of 25 to 40 feet below grade by extraction of coal was the site of the second field demonstration. This mine had been worked extensively prior to 1910 and no mine maps were known to exist. Some means of periodic surveillance for assessment of structural integrity and possible early detection of subsidence had been a Departmental objective. The feasibility of photographic surveillance was evaluated at two preliminary locations. Two mine chambers were located with 3 inch augers drilling through the overlying cyclic Pennsylvanian sediments. A core drill was then used to drill larger holes which were cased and capped with 6 inch plastic pipe. One chamber was found to be drained while a second chamber, at a lower elevation, was found to be water-filled.

Using the Konica camera, photographs were obtained from within the dry chamber even though only about a foot of vertical clearance remained at the drilled location. These photographs revealed extensive roof fall thoughout the chamber but showed the arched roof rock to be intact. Examples are shown in Figures 10 and 11. The interpreted dimensions of the mine chamber are sketched as Figure 12. Use of underground photography through a single access hole showed not only the dimensions and orientation of the chamber but also geological and structural detail unobtainable by additional drilling.

The second chamber, which was water-filled, was similarly photographed using a waterproof housing. Here the photography

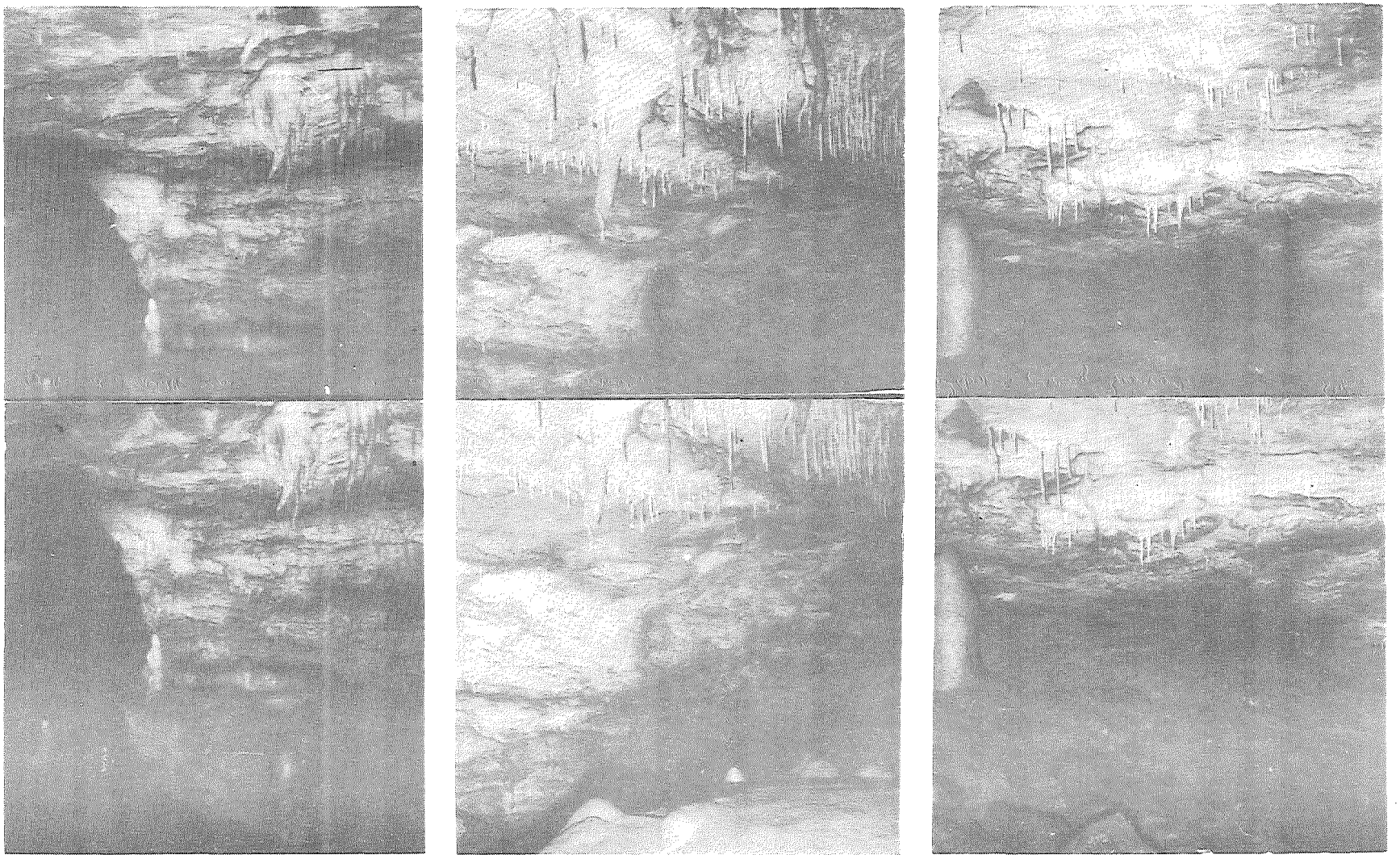

Figure 8. Examples of Stereo Pairs From the Cave Investigation.

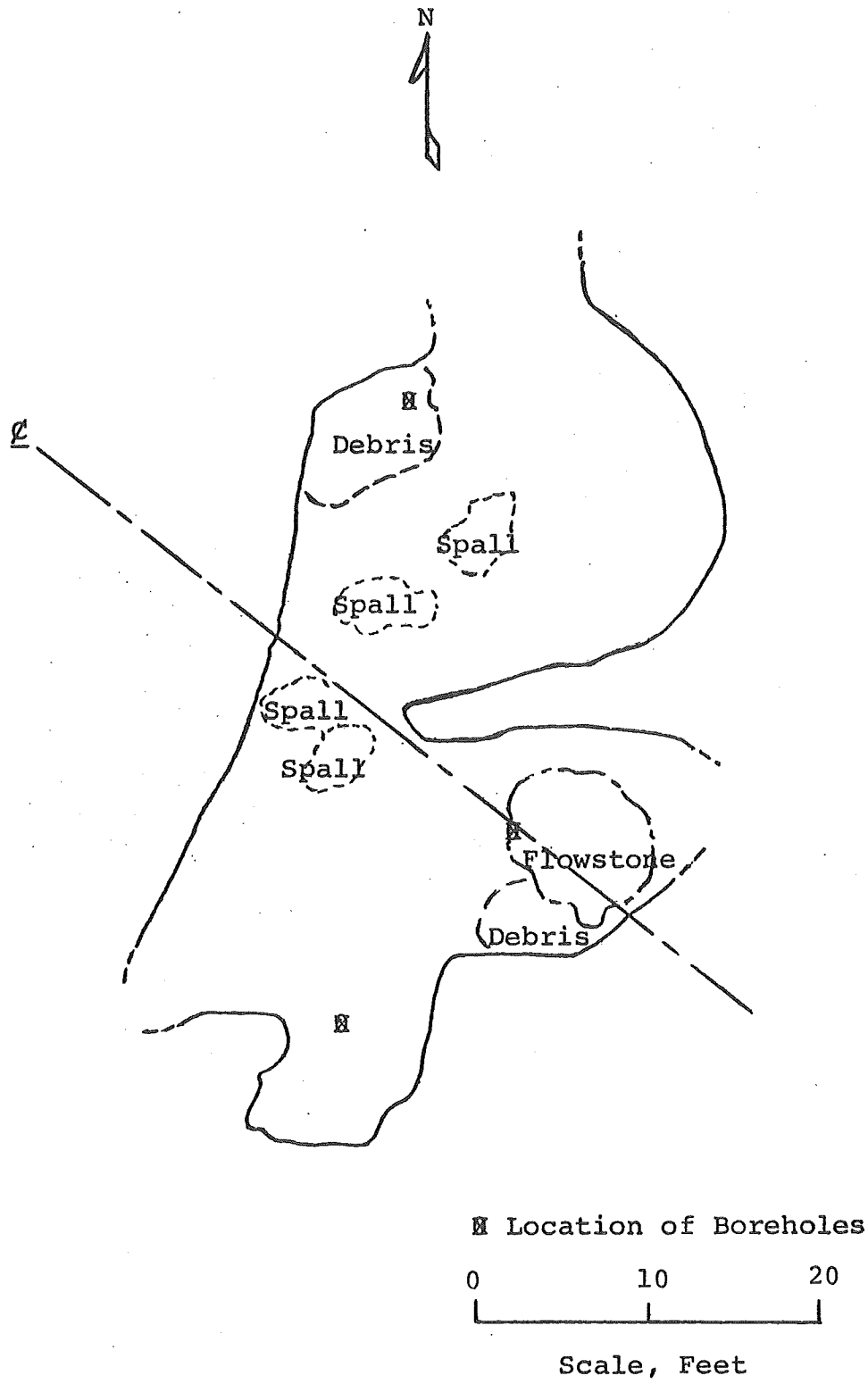

Figure 9. Sketch of Cavern Based Upon Distances Determined From Stereo Pairs.

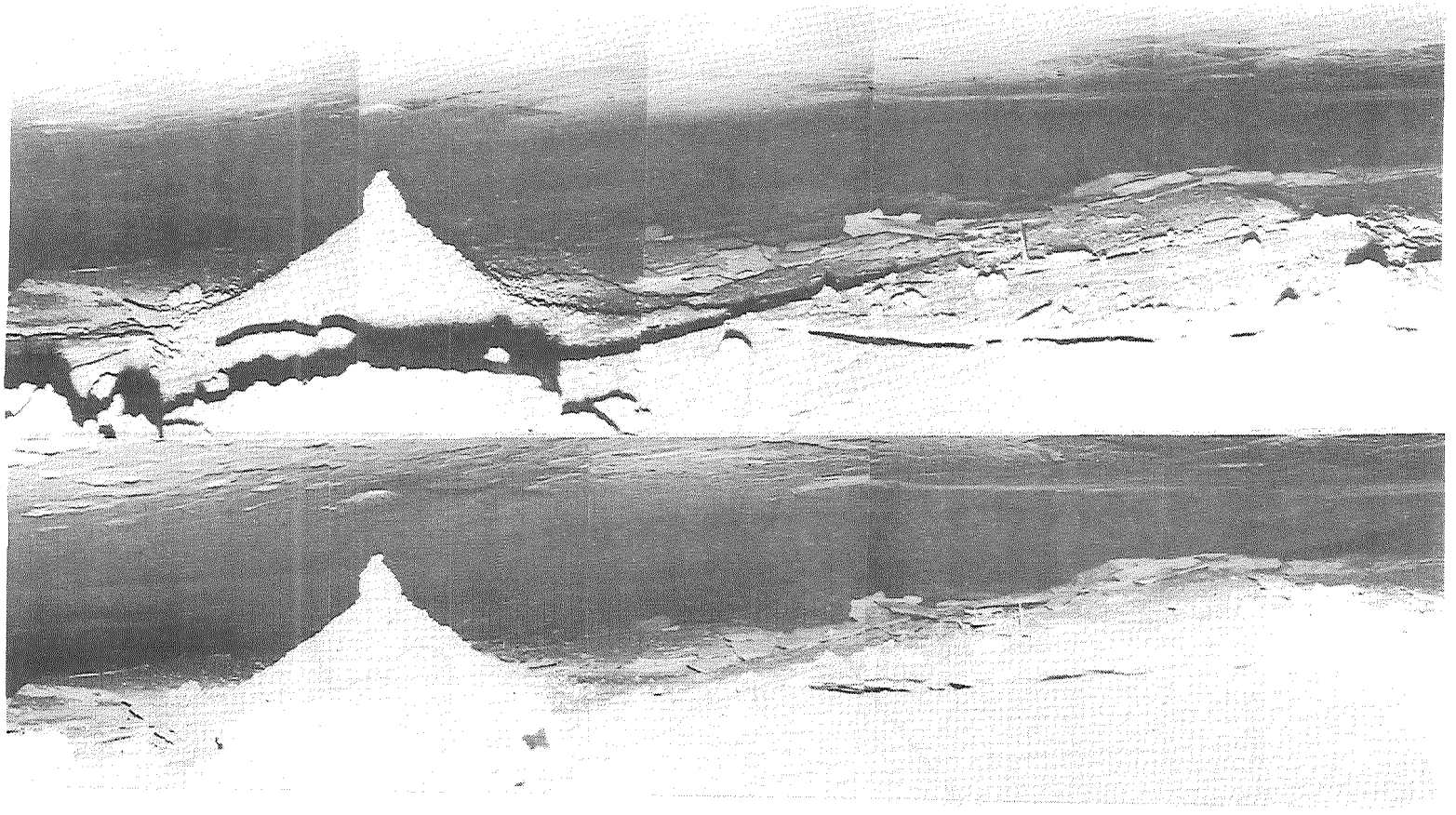

Figure 10. Portion of Circumferential Stereo Coverage Obtained From the Coal Mine Investigation

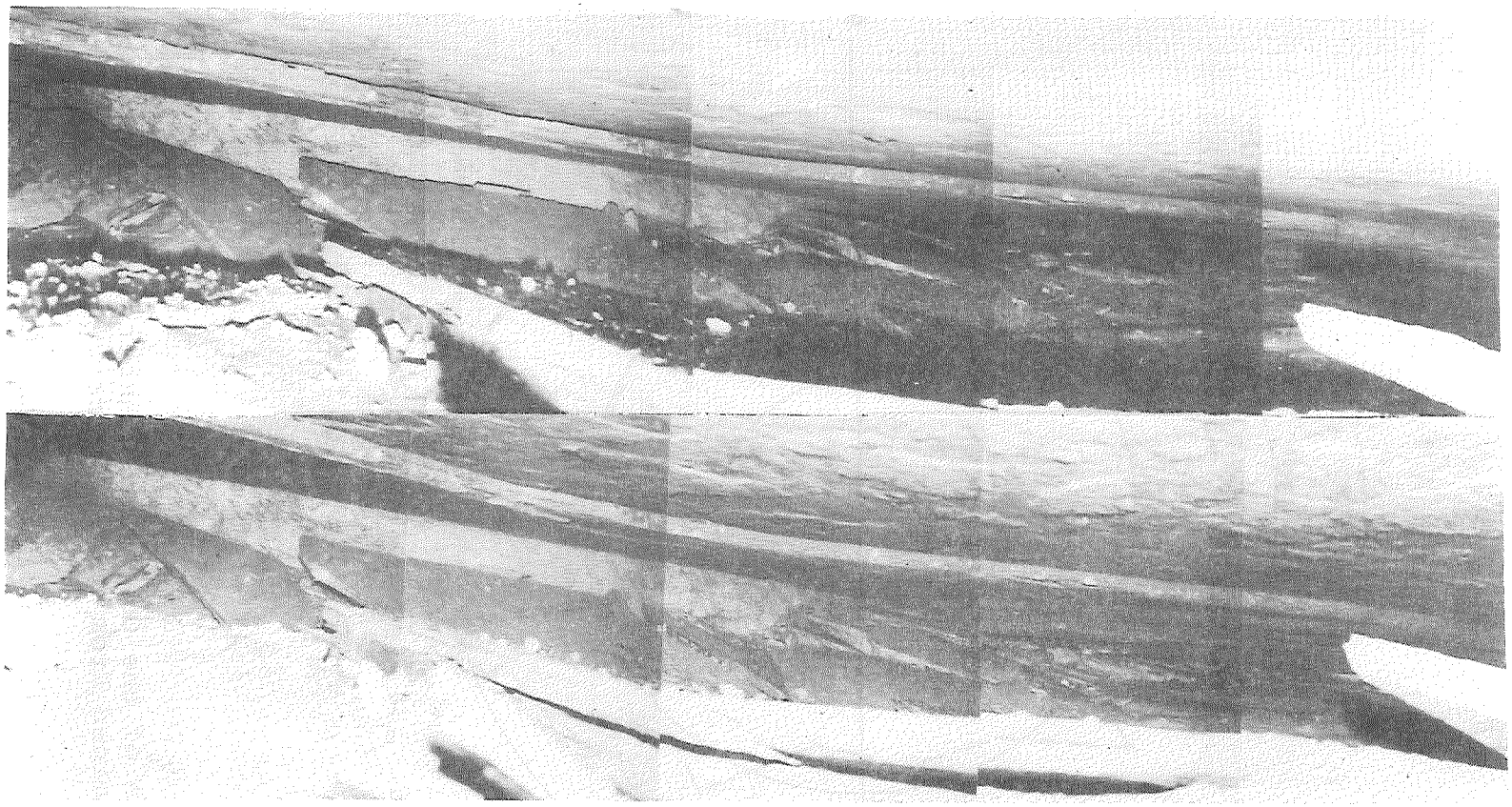

Figure 11. Another Portion of Circumferential Stereo Coverage Obtained From the Coal Mine Investigation

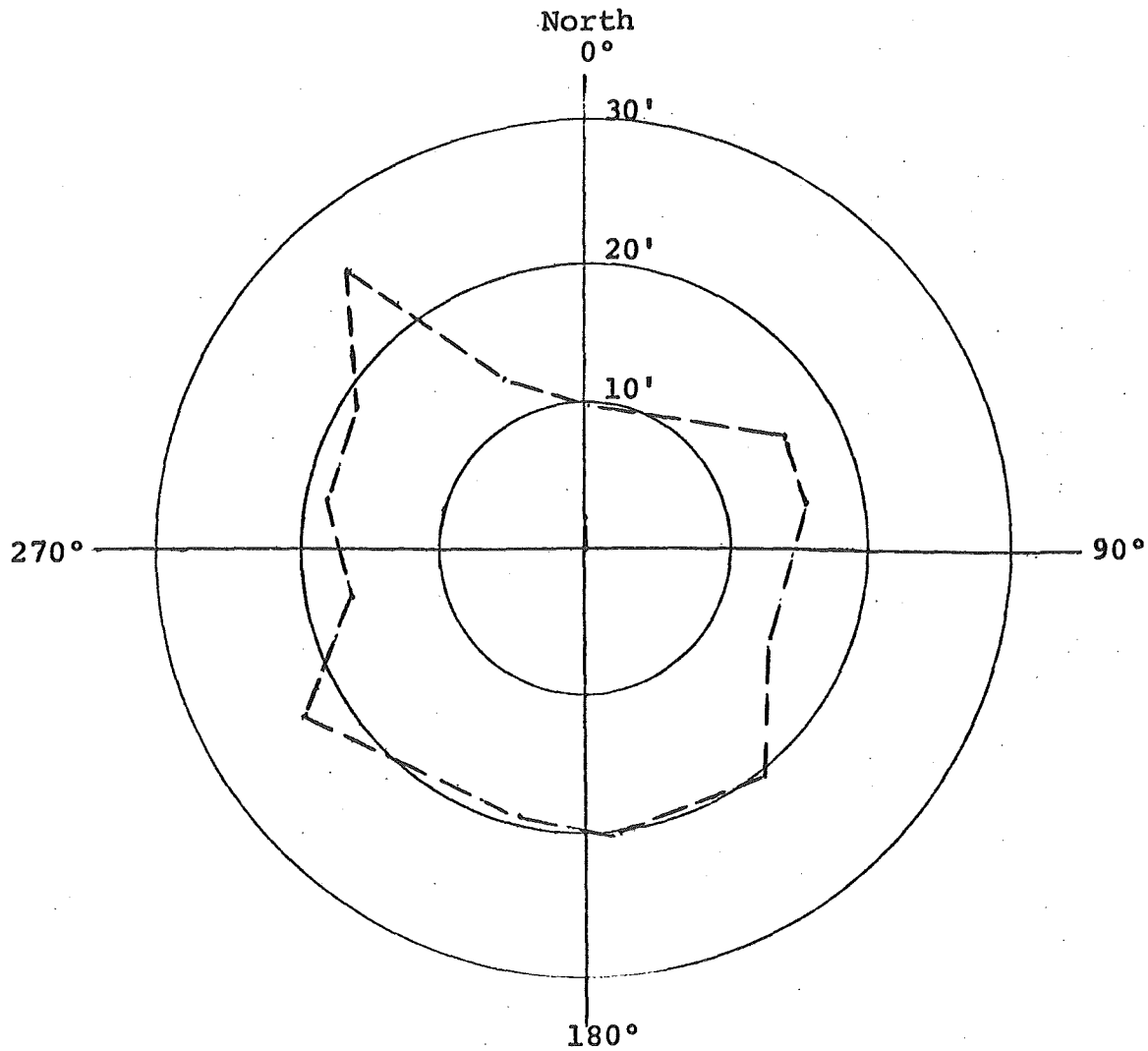

Figure 12. Sketch of the Coal Mine Chamber Based Upon Distances Determined From Stereo Pairs

was also effective, but only due to the smaller chamber dimensions. The maximum distance to a mine wall was calculated to be nearly 12 feet, which was also the approximate limit of light penetration in the mine water. Again, photographs revealed a roof fall in one area of the chamber. A sketch of the chamber interpreted from stereo pairs is shown as Figure 13. In this water-filled chamber, the photographs were later supplemented by a sonar survey using a marine depth finder. This is discussed in another section of this report.

Photography, supplemented by sonar, proved sufficiently promising that 10 additional chambers were subsequently accessed by permanent cased boreholes for future periodic surveillance. It is planned to maintain a file of photos and sonar graphs for comparison to subsequent surveys. It is hoped that this comparison will permit detection of any tendency for accelerated deterioration in time to permit corrective action.

Lead Mine. This field test involved an abandoned and water-filled lead mine at depths of approximately 50 to 90 feet below the surface. Old mine maps were available but subsequent adjacent collapses extending to the surface and prior attempts at filling had complicated the subsurface picture. It was planned to commence filling the mine beneath the roadway with coarse sand sized "chat" or mine tailings through holes drilled and cased into the opening. These holes were of the same diameter required for the photographic equipment and it seemed logical to attempt to supplement the maps with pictures despite a water table extending to within a few feet of the surface.

To cope with water pressures of up to 38 p.s.i., a housing was built using a Plexiglas cylinder some 4 feet in length, providing some 2 feet of water storage capacity below the Konica camera and flash in the event of a leak.

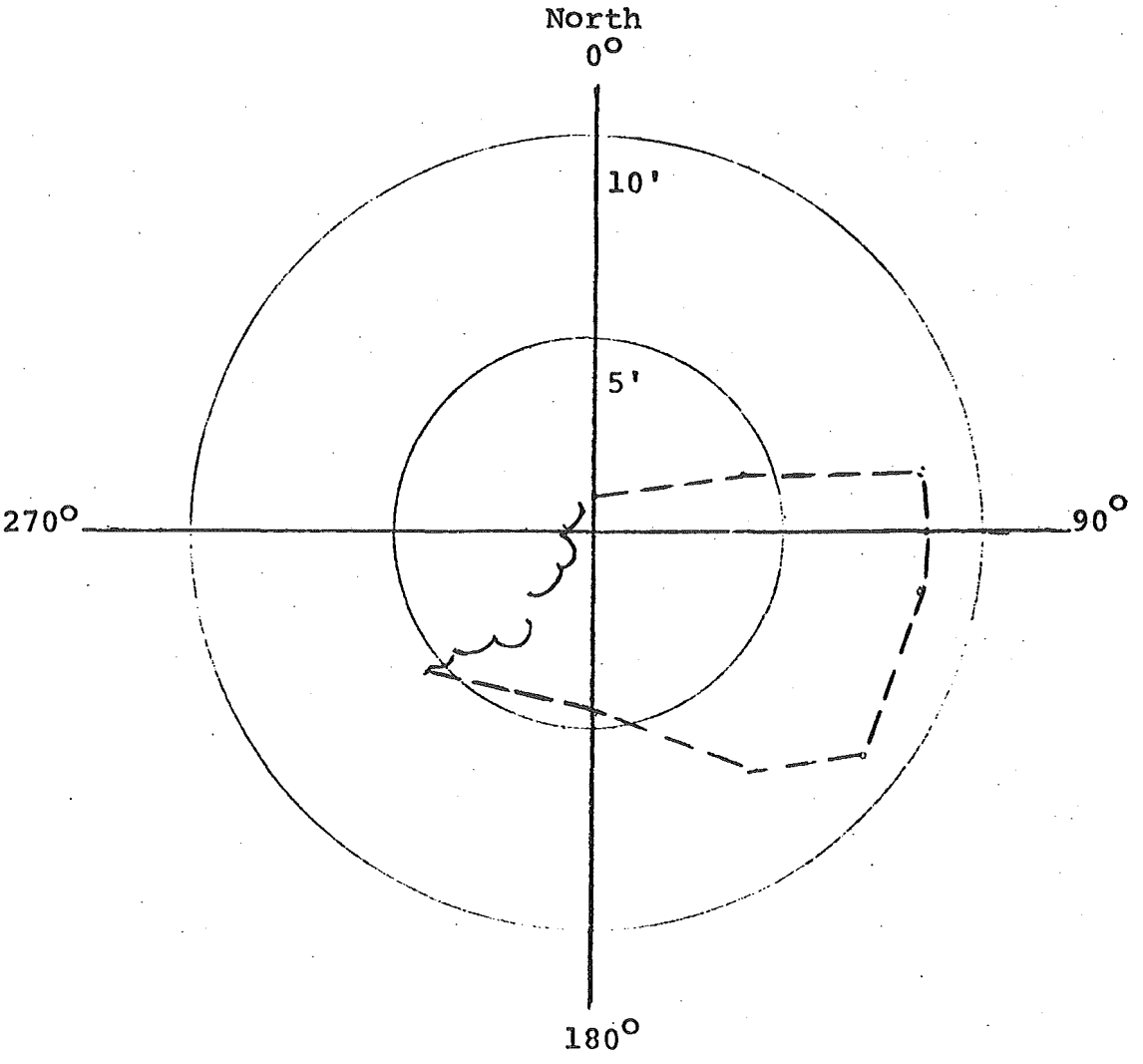

Figure 13. Sketch of Water-Filled Mine Chamber Based Upon Distances Determined From Stereo Pairs

Further protection was provided in the form of a water detection circuit, 2 separated, bared wires fastened about 2½ inches above the bottom of the cylinder and extending to a voltmeter at the surface.

With approximately a half hour required to go in and out of the hole to maximum depths, a heavy leak could easily have ruined the camera. While no serious leaks were encountered, minor ones were common. The water detection circuit was activated only once when about 3 inches of water accumulated in the bottom of the housing.

Photographs were recovered of the wall, floor and roof area of the mine from within only a few feet of the camera, so close that stereo was not obtainable with the vertical offsets used. Turbidity of the water, verified by a water sample, limited effective light transmission. Use of two strobe units in the housing had no significant effect. Further studies at this site were done with the sonar device, discussed in a subsequent section.

SUPPLEMENTAL SONAR SURVEYS

Since underwater photography appeared to be limited to distances of about ten to twelve feet or less, depending on the clarity of the water, it was decided to evaluate the feasibility of supplementing photography with sonar in its most readily available form, the ordinary marine depth finder, as a means of determining horizontal distances.

An excellent, non-technical summary of problems in interpreting depth finder signals is presented by Pazik (3) in the magazine Fishing Facts. This discussion indicates that marine depth finders can be expected to have inherent limitations where extremely irregular surfaces are encountered. For both economy and signal display stability in moving boats, such devices transmit sound in a fairly broad cone or lobe shaped pattern. The unit will indicate as depth or distance the first signal which is reflected from any object from within this cone with sufficient strength to exceed a threshold level controlled by a discrimination circuit within the unit. The effective cone angle will vary with the distance of the reflecting object and the signal strength or "gain" used. The indicated depth or distance does not necessarily originate, as may be assumed, from along the axis of the sound cone. More importantly, a strong "early arrival" echo reflected from a nearby protruberance within the cone may obscure weaker reflections from a more distant surface which could be of greater interest in a downhole survey.

Criteria established for sorting through the numerous available commercial units included the following:

1. It should be of the recording chart type so as to preserve records for development of interpretive skills and for comparisons when

used for periodic surveillance. A chart "event marker" was also deemed desirable for correlation and orientation control purposes.

2. It should possess shallowest (or shortest) possible depth ranges to facilitate use within small chambers, at distances possibly as close as 2 or 3 feet. Most models have fairly large depth ranges, 0 to 60 feet being a common initial range with optional scales larger.
3. It should be moderately priced since this was a feasibility study. $500 was established as a desirable limit.

The model which appeared to best meet these criteria was the Si-Tex HE-256. This model cost $320 and possessed six alternate range scales, the smallest of which is 0 to 12 feet. Moreover, the vendor reported this model to be trouble free in his experience and our experience to date confirms his judgement.

Two transducers were purchased, a transom mount type and a puck type.

Only two modifications were made to the equipment as purchased. The transom mount transducer was enclosed within a protective metal strap and attached to the bottom of a section of aluminum rod so that the transducer would broadcast horizontally rather than vertically. The short transducer cable was spliced to extend to 120 feet, the maximum length of rods available with the photographic system. The equipment is shown in Figure 14.

The procedure used was to lower the transducer to the desired elevation, using the rods and table used for down-hole photography, and rotate the transducer in increments of 10 degrees. The transducer was allowed to remain fixed at each increment for about five seconds while the chart recorded about 10 sweeps of the recording needle.

The marker button was then pushed, marking the reading at that azimuth, and the transducer was again rotated 10 degrees, etc. until a full 360 degrees had been covered. Interpreted distances were then scaled onto a polar graph and the chamber perimeter sketched through the plotted points.

The accuracy of the instrument calibration with the additional cable length was first verified by correlation to weighted line depth soundings in normal marine use. Initial down-hole use was in the water-filled coal mine chamber previously discussed. Experimentation indicated that, as expected, optimum results were obtained at the lowest power or gain setting, 1 on a scale of 10. So used, fairly good correlation was found between indicated horizontal distances to chamber walls and the distances previously calculated from stereo photography. An example of the strip chart recording and interpreted cavity shape are shown in Figure 15. This is the same mine chamber sketched in Figure 13 from interpretation of underwater photographs. While details differ, there is good general agreement in size, shape and orientation of the chamber as interpreted by the two techniques. A combined interpretation, based upon the angular relationships determined from the photos and the distances determined by sonar for the far wall, would undoubtedly be more accurate than the individual interpretations.

The sonar equipment was next used in the lead mine previously discussed through holes drilled into a large cavity. Figure 16 shows a sketch interpreted from readings taken in one of these holes. This hole is indicated to be close to a wall and this was confirmed by the photographic survey.

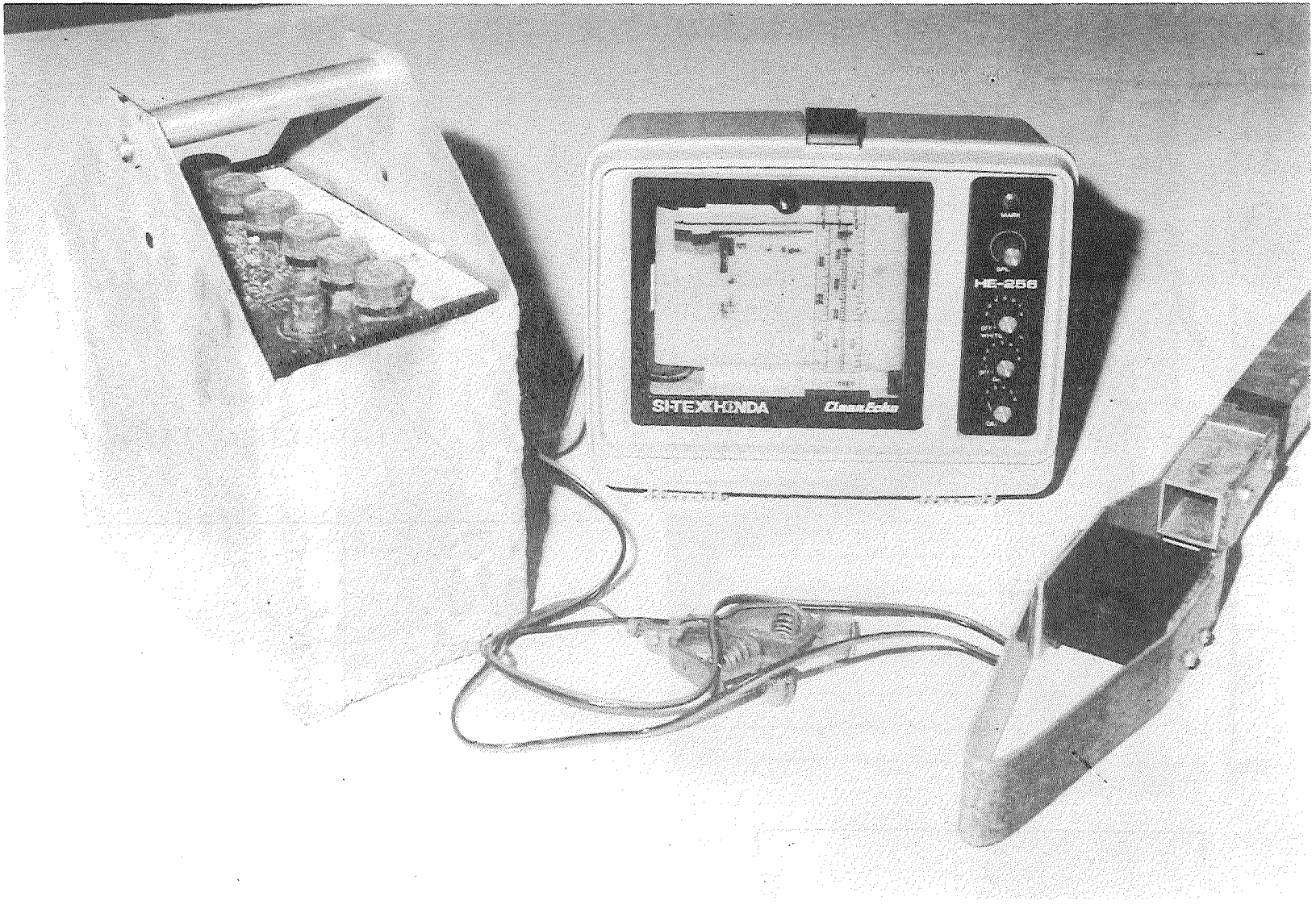

Figure 14. Depth Finder With Transducer Mounted for Down-Hole Use.

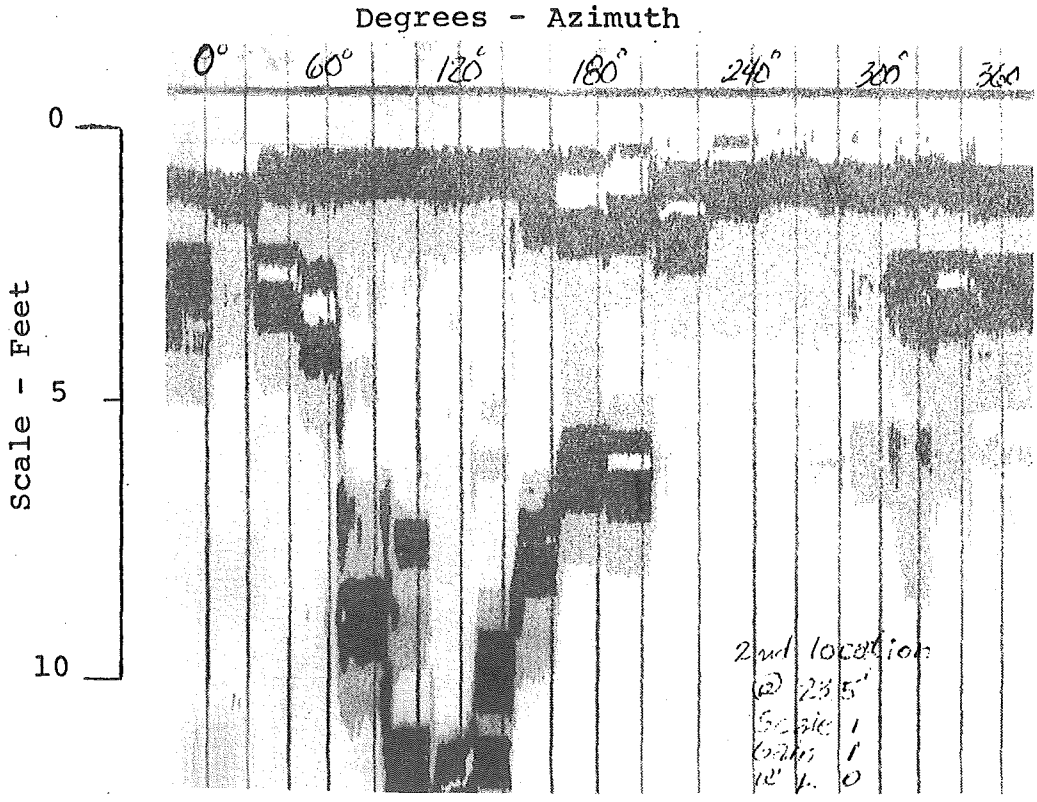

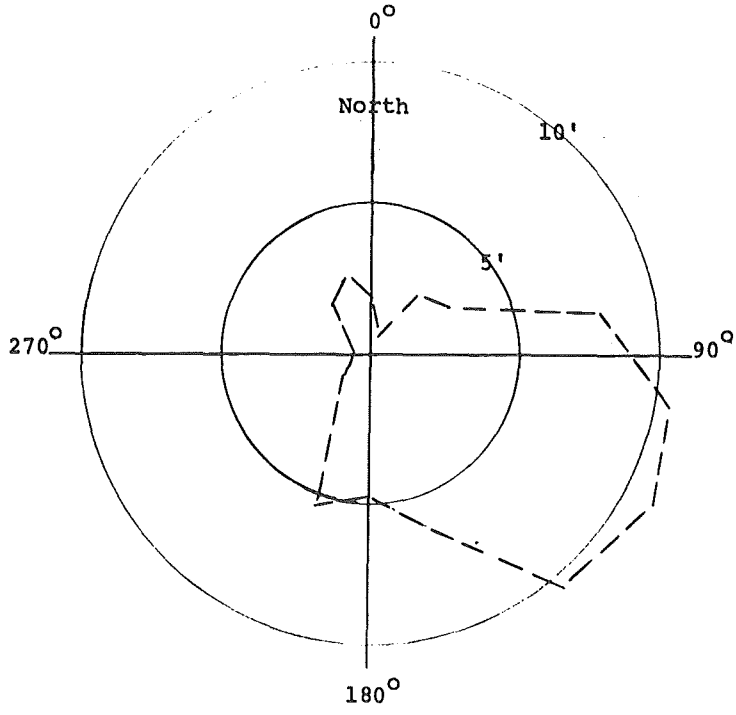

Figure 15. Sonar Graph and Interpreted Coal Mine Chamber Outline

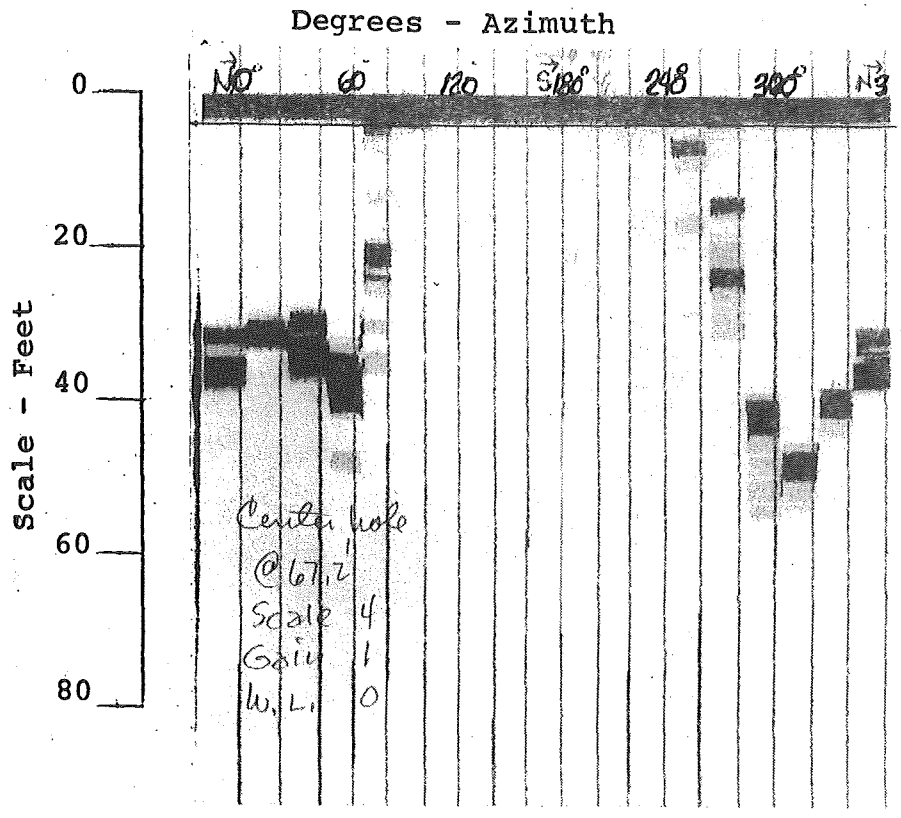

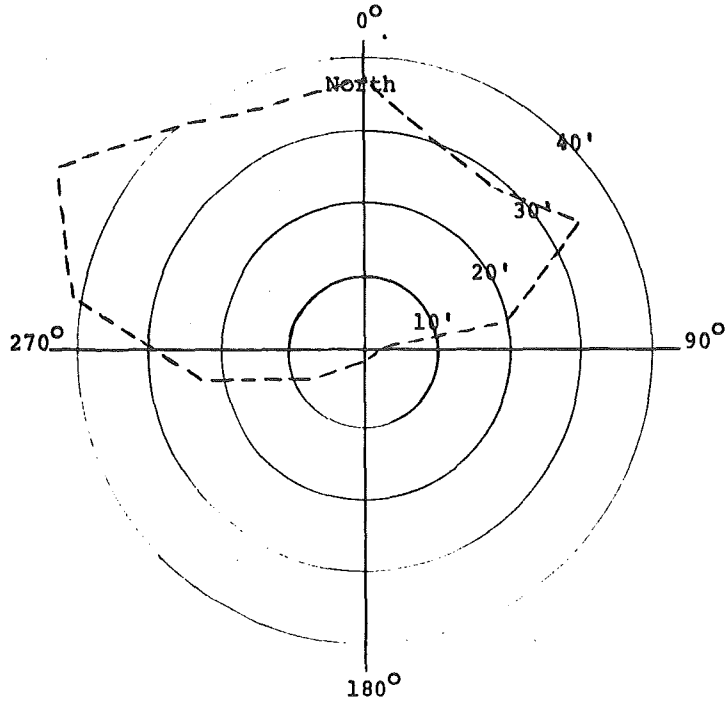

Figure 16. Sonar Graph and Interpreted Lead Mine Chamber Outline

REFERENCES

1. Lundgren, R., Sturges, F.C., and Cluff, L. S., "Borehole Cameras", Materials Research and Standards, American Society For Testing and Materials, Vol. 8, No. 8, P. 17-22, August, (1968).
2. Modern Tests, "Motor-Driven Konica FS-1 Auto 35mm SLR" Modern Photography, Vol. 43, P. 120-124, June, 1979.
3. Pazik, G. "Should You Buy A Depth Sounder" Fishing Facts, Vol. 10, No. 3, P. 100-116, March, 1976.

MoDOT Library
RD0016093