Documentation of the Historic Blue River Bridge

Bridge No. J0526
Jackson County, Route 40
April 2016

MoDOT

U.S. Department of Transportation
Federal Highway Administration

Documentation of the Historic Blue River Bridge

Bridge Number J0526
Route 40, Jackson County, Missouri
MoDOT Job Number J4I1916

Historical and Photographic Documentation

Prepared By:

Julia Larson
Historic Preservation Specialist

Submitted to:

The State Historic Preservation Office
Missouri Department of Natural Resources

Prepared For:

The Federal Highway Administration
In Compliance with
Section 106 of the National Historic Preservation Act

Patrick K. McKenna, Director
Missouri Department of Transportation

April 2016

Table of Contents Pages

Figures……ii

Introduction……1

Historical Narrative……1
Introduction……1
Blue River Location……2
U.S. Route 40……6
Plans……8
Design: History of the Tied Arch……10
Funding……12
Construction……13
Contractors……17

Significance……18

Physical Bridge Description……19
Overview……19
Substructure……19
Superstructure……20
Modifications……21

Relocation……21

Bibliography……24

Appendix A: Original Bridge Plans

Appendix B: Plates of Archival Photographs

Figures Page

Figure 1: Blue River location. (Maps created by Julia Larson using ArcGIS, Adobe Illustrator and Google Maps, created March 22, 2016)…….…….……..2

Figure 2: Blue River location map in proximity to the Missouri River. (Drawn by Julia Larson using ArcGIS, February 17, 2016).……..……..….……3

Figure 3: 1907 map showing bridge locations in the area before the Blue River Bridge. ("Kansas City, Kansas and Missouri," 1907, from *The New Encyclopedic Atlas and Gazetteer of the World*, edited by Francis J. Reynolds, New York, NY: P.F. Collier & Son, 1917, accessed March 8, 2016 from http://www.library.utexas.edu/maps/kansas.html).....5

Figure 4: Detail map showing where U.S. 40 cut-off and U.S. 40 diverge. (Drawn by Julia Larson using U.S.G.S. topographic maps from 1934 and 1935)……..……..8

Figure 5: Roads with no inner fill are dirt roads, black filled are hard surfaced highways. The dotted line near the center of the picture on the yellow line is U.S. 40 cut-off plans. (Greater Kansas City Regional Plan Association, "Regional Map of Greater Kansas City," March 1932, Jackson County Missouri, *Results of County Planning: Jackson County Missouri*, Gallup Map & Supply Co.: 1933)…….…….……..……....9

Figure 6: Location of all three bridges for the project NRM 352A. (Notation added by Julia Larson from a 1934 and 1935 U.S.G.S. Topographic Map)……...……..10

Figure 7: Newspaper clipping from 1933. ("A 40 Cutoff Start," *The Kansas City Star*, October 9, 1933, Vol. 54, No. 22, p. 1, microfilm, State Historical Society of Missouri, Columbia, Missouri).....14

Figure 8: Map of project details. ("Work to Complete U.S. Highway No. 40 Cutoff Will Begin Today," *The Kansas City Times*, October 10, 1933, microfilm, State Historical Society of Missouri, Columbia, Missouri)……...……...….…14

Figure 9: Left: Construction of the Bridge. ("Piers for the Bridge over the Blue River on U.S. Highway No. 40 Cutoff are being Constructed," *The Kansas City Times*, December 2, 1933, p. 3, microfilm, State Historical Society of Missouri, Columbia, Missouri.); Right: Completed Blue River Bridge. (1934/1935 Missouri Department of Transportation Archival Photographs, Missouri Department of Transportation, Jefferson City, MO)…….……..16

Figure 10: Elevation of Blue River Bridge. (Missouri State Highway Department, "Bridge over Blue River, Proj. No. N.R.M. 352A (U.S. 40AP) STA 37+25," Bridge Division, Missouri Department of Transportation, Jefferson City, Missouri)……...…....19

Figure 11: Deconstruction of Blue River Bridge in 2014. (Missouri Department of Transportation, "Manchester Bridge," accessed on March 8, 2016 from MoDOT Flickr website, https://www.flickr.com/photos/modot_kc/sets/72157634494963367/ with/15416067250/)……..…….21

Figure 12: Rendering of how the Blue River Bridge will look at its replacement site. (Jodi Martin, "Historic Bridge Reuse in the Heartland," *The Municipal*, February 17, 2015, accessed February 25, 2016 from http://www.themunicipal.com/2015/02/historic-bridge-reuse-in-theheartland/; Rendering on the right from City of Grandview, received March 9, 2016).....22

Figure 13: New location for the Blue River Bridge. (Map created by Julia Larson using ArcGIS, created March 3, 2016)…….....…..23

INTRODUCTION

The Missouri Department of Transportation (MoDOT) replaced Bridge J0526 crossing the Blue River along U.S. Route 40 (U.S. 40) due to safety concerns. The new bridge is adjacent to and suitable to carry I-70 traffic. When east and west bound bridges along I-70 were replaced in 2014-2015, the new U.S. 40 Bridge carried the I-70 traffic.[1] The two bridges along I-70 and replacing the historic Blue River Bridge (J0526) (Bridge) on U.S. 40 were part of the same MoDOT Job J4I1916. The Blue River Bridge was dismantled and relocated to storage at the Tail and Trails Dog Park in Grandview, MO, the location where it will be reconstructed.[2]

The original 1933 bridge was determined eligible for the National Register of Historic Places under Criterion C for engineering due to its structural type, a steel tied arch, and the amount of intact original materials. Its relocation would have an adverse effect on the Bridge.

In consultation with the Missouri State Historic Preservation Office (SHPO) and the Federal Highway Administration (FHWA), a Memorandum of Agreement (MOA) for mitigation of the adverse effect was developed and executed on May 13, 2013. The MOA calls for the documentation of the historic bridge with archival photographs, historic narrative and original bridge plans. This documentation is submitted as a fulfillment of those requirements.

HISTORICAL NARRATIVE

Introduction

The Bridge over the Blue River just north of I-70 carried traffic for U.S. 40 and was commonly known as the Blue River Bridge. It was designed by the Missouri State Highway Department and constructed in 1933-34 by Davis Construction Company, Gerard Knutson Firm, and Lay Construction Company.[3] The Bridge consisted of seven spans, four approach spans from the west, two approach spans from the east and one main span. The entire superstructure was 430' long with a 40' roadway. The main span, Span 5, was a steel, through, tied arch measuring 140'[4]; details regarding the construction of the bridge are outlined below. The Blue River Bridge was historically significant for its engineering as a rigid-connected tied arch. The Highway

[1] Missouri Highway and Transportation Commission, "Repairs to Bridge over Blue River, Project No. FA-3334 (410), Job No. 4U 751-40, Rt. 40, plans," March 1991, Bridge Division, Missouri Department of Transportation, Jefferson City, Missouri; Missouri Highways and Transportation Commission, "Bridge: US-40 Over Blue River, Job No. J4I1916, Plans," May 2014, Design Division, Missouri Department of Transportation, Jefferson City, Missouri.

[2] Michelle Pekarsky, "Historic Route 40 bridge moved to Grandview to become walking bridge," Fox News WDAF-TV (Kansas City), September 15, 2015, accessed on February 13, 2016, from http://fox4kc.com/2015/09/15/historic-route-40-bridge-moved-to-grandview-to-become-walking-bridge/.

[3] Missouri State Highway Commission, "Minutes of the Meeting of the State Highway Commission, held in Jefferson City, Missouri, October 7, 1933," p. 12, as held by the Secretary to the Commission, Missouri Department of Transportation, Jefferson City, Missouri.

[4] Missouri Highways and Transportation Commission, "Bridge: US-40 Over Blue River Job No. J4I1916, Plans."

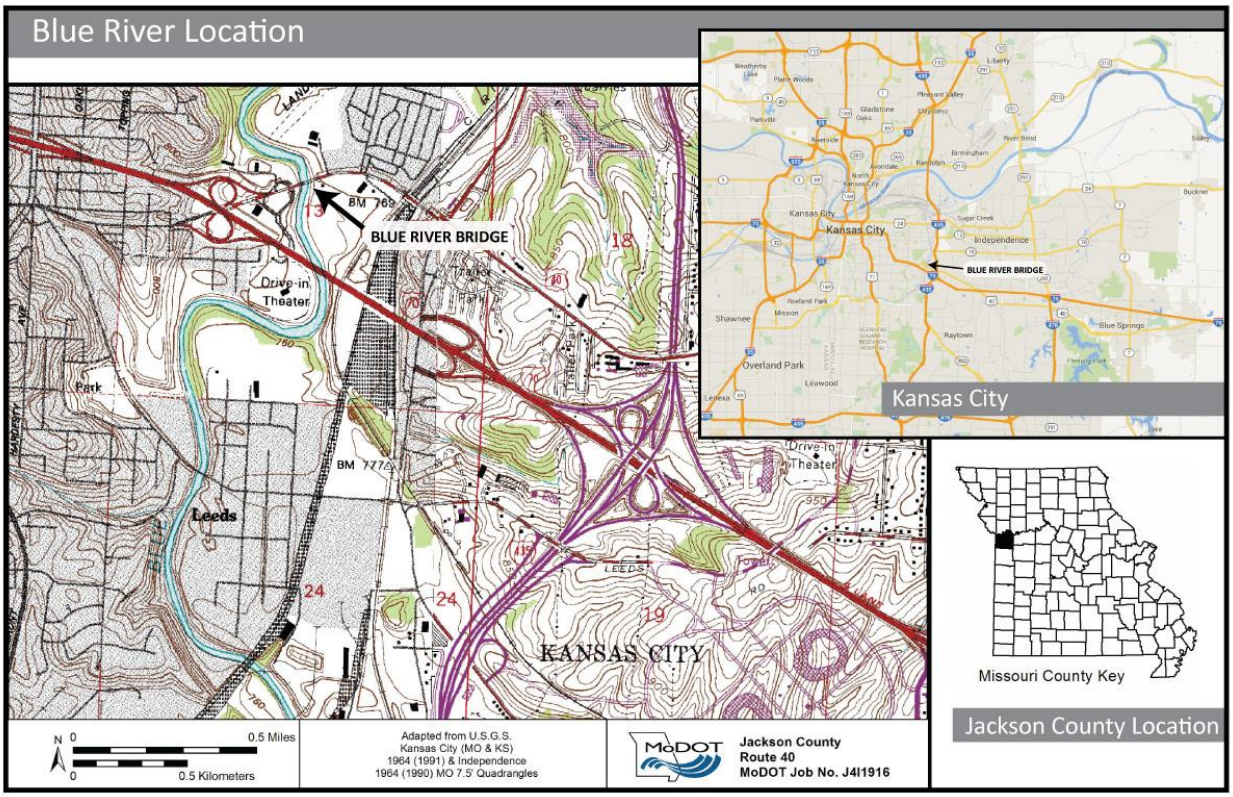

Figure 1: Blue River location. (Maps created by Julia Larson using ArcGIS, Adobe Illustrator and Google Maps, created March 22, 2016).

Department never embraced the tied arch as a standard design, making the Bridge an uncommon instance of experimentation by the Highway Department.[5]

Blue River Location

The Blue River Bridge intersected the Blue River (River) near Kansas City, Missouri (See Figure 1). The Blue River basin is a sub-basin of the Missouri River basin and was an important feature of the Kansas City area in the 1930s due to its connection with the Missouri River (See Figure 2). The forty-one mile Blue River's origins are at the confluence of Wolf and Coffee creeks, three miles south of Stanley, Kansas. The river flows northeast through the Kansas City metropolitan area, entering the Missouri River at river mile 357.[6] The United States Geological Survey (USGS) notes the Blue River as having a variant name of "Big Blue River" noted on some maps from the late 19th century and early 20th century. The USGS states the name "Blue

[5] Clayton Fraser, *Missouri Historic Bridge Inventory (Draft)*, "Blue River Bridge Data Sheet," Loveland, CO: Fraserdesign, 1996, available at Historic Preservation Section, Missouri Department of Transportation, Jefferson City, Missouri.

[6] Kevin Sullivan, Robert Pulliam, Gregory Pitchford and Philip Jefferies, "Location," Missouri Department of Conservation, March 22, 2011, accessed on January 15, 2016 from http://mdc.mo.gov/category/editorial-tags/blue-river?page=2.

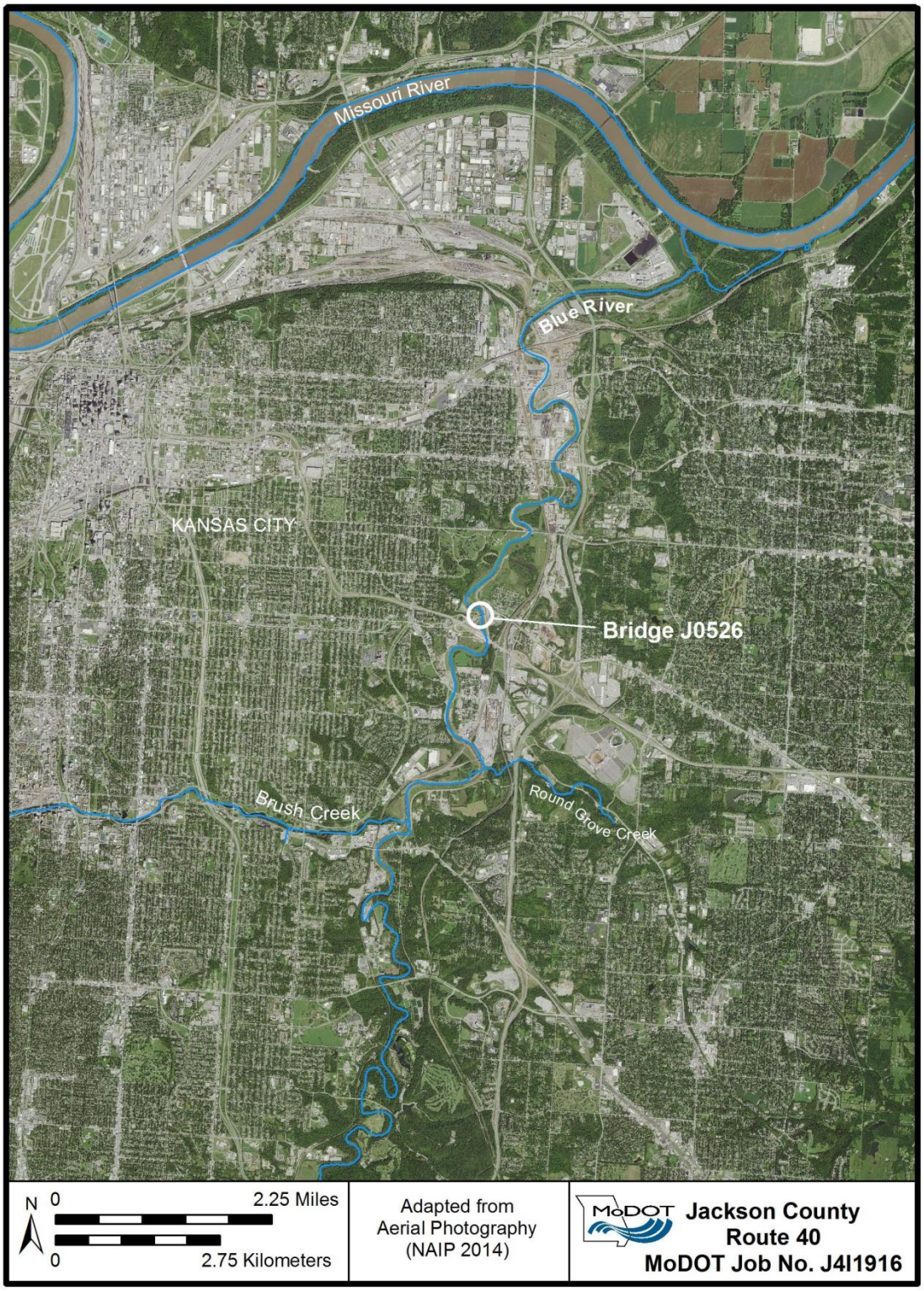

Figure 2: Blue River location map in proximity to the Missouri River. (Drawn by Julia Larson using ArcGIS, February 17, 2016).

River" as the official name of the stream, approved by the U.S. Board on Geographic Names in 1963.[7] The Blue River Area has histories as a battlefield area, natural area and industrial area. The area had battlefields during the Civil War including the Battle of the Big Blue.[8] The Big Blue River was described as "Big Blue," which has a deep channel, rapid current, and "on both sides for nearly its whole course…timber of good quality, and …building stone …in endless quantities."[9] This "timber of good quality" was cleared and floated to the Missouri River. The book notes industry along the Blue River included the Cummins' Mill.[10] According to David Jackson, eastern manufacturers and real estate agents facilitated the creation of factories and "towns" in the Blue River Valley in the 1880s.[11] Most of these towns were built with English capital, with notable names such as Manchester, Centropolis, and Sheffield.[12] The area around the Blue River Bridge morphed into an industrial area. Then, the Panic of 1893 caused most of the businesses in the area to close or leave the valley. Later, other businesses moved in, such as the Kansas City Nut and Bolt Company, which later became Sheffield Steel, then Armco. [13]

The Blue River Bridge was in an area along the Blue River known as the Blue Valley Industrial Area.[14] The Blue Valley Industrial Association was founded in 1920 to develop and promote the welfare of the Blue Valley district.[15] *Missouri: A Guide to the "Show Me" State,* written in 1941 by the WPA Writers Program, mentions the Blue River Valley as an area at Kansas City's north-eastern tip with lots of bluffs.[16] It states, the Blue River "whose color at this point is at odds with

---

[7] United States Geological Survey, "Feature Detail Report for: Blue River," October 13, 1978, accessed on January 25, 2016 from http://geonames.usgs.gov/apex/f?p=gnispq:3:0::NO::P3_FID:479576.

[8] The *History of Jackson County, Missouri* stated, "General Curtis and his corps of officers decided to take the next stand on the west bank of the Big Blue River, a few miles west of Independence," Union Historical Company, *The History of Jackson County, Missouri*, Kansas City MO: Union Historical Company, Birdsall, Williams, & Co., 1881, p. 293, accessed February 3, 2015 from https://books.google.com,; David Jackson, *Kansas City Chronicles: An Up-to-Date History*, Charleston, SC: The History Press, 2010, "Bucolic Big Blue River Valley's Past and Future section," para. 4, accessed February 3, 2016 from https://books.google.com/.

[9] Union Historical Company, p. 71.

[10] Ibid., p. 130.

[11] Jackson, "Bucolic Big Blue River Valley's Past and Future section," para. 5.

[12] Ibid.

[13] Ibid.

[14] Kansas City Industrial Council, "Industrial Areas: Map," accessed January 28, 2016 from http://www.kciconline.com/industrial-areas/map/.

[15] Blue Valley Industrial Association, "About: History," accessed January 28, 2016 from http://bvia.org/about-2/history/.

[16] Writers' Program of the Work Projects Administration in the State of Missouri and Douglas Pappas, *Missouri: A Guide to the "Show Me" State*, New York, NY: Duell, Sloan and Pearce, 1941, p. 243, accessed January 27, 2016 from http://babel.hathitrust.org/cgi/pt?id=mdp.39015013091080;view=1up;seq=317.

its name," was near the Ford Motor Company plant, mills of the Sheffield Steel Corporation, Chevrolet and Fisher Body plants and connects to the Leeds district.[17]

Two bridges previously existed in the area before construction of the Blue River Bridge, the Old Westport / Independence Road Bridge, and the bridge through Leeds. When the Blue River Bridge was built, the Old Westport / Independence Bridge was decommissioned (See Figure 3). The Blue River Bridge came through the industrial area as an important mode of transportation for the rising use and size of vehicles in the 1930s.

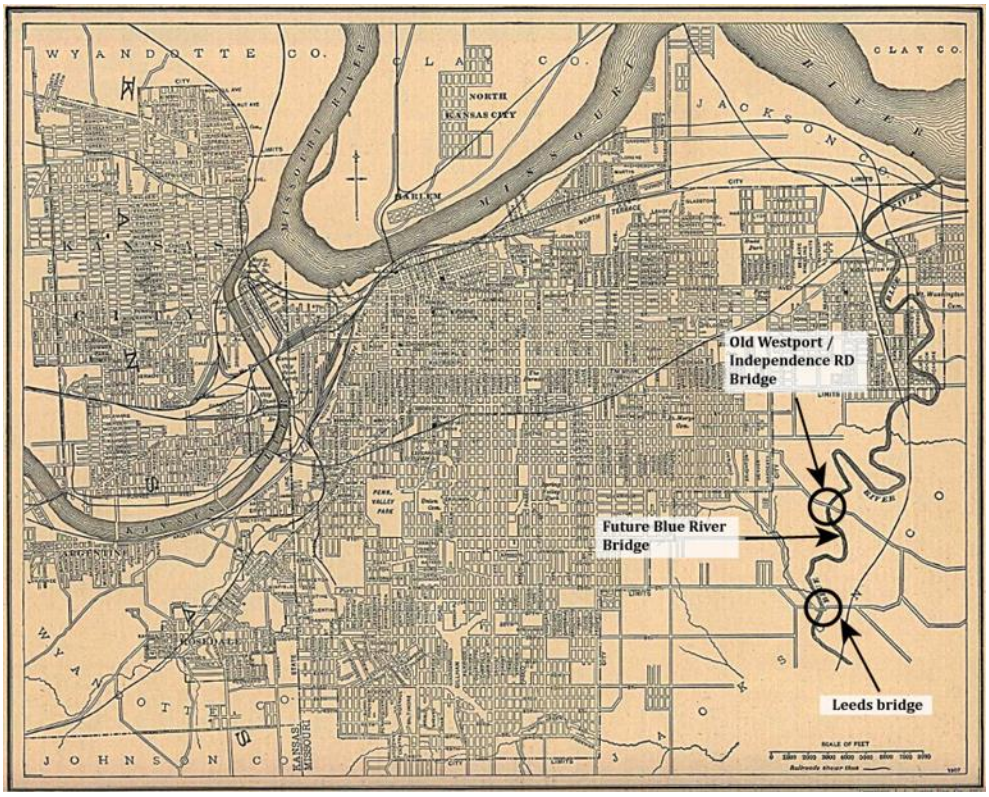

Figure 3: 1907 map showing bridge locations in the area before the Blue River Bridge. ("Kansas City, Kansas and Missouri," 1907, from *The New Encyclopedic Atlas and Gazetteer of the World,* edited by Francis J. Reynolds, New York, NY: P.F. Collier & Son, 1917, accessed March 8, 2016 from http://www.library.utexas.edu/maps/kansas.html).

Along with industry, the social scene in the area was unusual for Kansas City. The Blue River Bridge is approximately three-quarters of a mile northeast of the Leeds district. Leeds was an early African American community in Kansas City as described in the book *Kansas City: Mecca of the New Negro* by Sonny Gibson,

> Near the end of the 19th Century (1880-1890), the Black population in Kansas City, Missouri was not large enough to record much sufficient evidence of its growth.

[17] Ibid.

> However, Black families were spotted living in Westport, and small fringe areas, 28th Street near Raytown Road in an area known as "Round Top" and Leeds, Missouri.[18]

The Big Blue River was a leisure area for the people including the creation of the Kansas City Boating Club, Missouri Canoe Club, Kansas City Yacht Club and many more all utilizing the Blue River for their recreation.[19] In 1896, the famous Swope Park along the Blue River was dedicated, south of the Blue River Bridge location, and the entrance was completed in 1905.[20] The Blue River area has changed throughout time, being important for its beauty, industrial uses, and social and recreational uses.

U.S. Route 40

While the Blue River area was an important crossroads for industry and recreation, the route the Blue River Bridge carried was an early embodiment of the history of road building in the Kansas City area. In Missouri, the Centennial Road Law was approved August 4, 1921.[21] This Law called for the creation of a State Highway Commission which would oversee construction and maintenance of a state-wide connected system of hard-surfaced public highways.[22] The oversight of the state-wide highway system required the Commission to name the routes on the system. One of the routes designated from existing roadways and newly constructed roadways in 1921 by the Commission was Route (Rte.) 2.[23] Rte. 2 was built on older highways including the Victory Highway, National Old Trails Road, and Boone's Lick Road.[24] This route was eventually renamed U.S. Route 40 due to a Federal re-designation of the names of U.S. routes in 1926.

---

[18] Sonny Gibson, *Kansas City: Mecca of the New Negro*, Kansas City, MO: Mecca Enterprises, 1997, accessed January 28, 2016 from http://www.duboislc.org/content/historical-look-african-americans-greater-kansas-city.

[19] Jackson, "Bucolic Big Blue River Valley's Past and Future section," para. 8.

[20] Patrick Alley and Dona Boley, *Images of America: Kansas City's Parks and Boulevards*, Charleston, SC: Arcadia Publishing, 2014, p. 91.

[21] Missouri State Highway Commission, *Third Biennial Report of the State Highway Commission of Missouri for the Period Ending December 1, 1922*, Jefferson City, MO: 1922, p. 57.

[22] Missouri State Highway Commission, *Third Biennial Report of the State Highway Commission*, p. 32-57.

[23] Missouri State Highway Commission, *Fourth Biennial Report of the State Highway Commission of Missouri for the Period Ending December1, 1924*, "Map of Missouri Showing- State Highway System of 7640 Miles and Route Numbers," approved September 19, 1922, insert pp. 62-63.

[24] Rand McNally and Company, *AutoTrails Map, Missouri, Arkansas, Kentucky, Tennessee*, Chicago: Rand McNally & Company, 1924, accessed January 29, 2016 from http://www.davidrumsey.com/; "Touring the New Victory Highway," *Concrete Highway Magazine*, Vol. VIII, No. 4, Chicago, IL: Portland Cement Association, April 1924, accessed February 11, 2016 from https://archive.org/stream/concretehighwaym00portrich#page/94/mode/2up/search/missouri; Dan A. Rothwell, *Along the Boone's Lick Road: Missouri's Contribution to Our First Transcontinental Route, U.S. Highway 40*, Chesterfield MO: Young at Heart Publishing Company and St. Charles, MO: Greater St. Charles Convention & Visitors Bureau, 1999, p. 14.

In the early 1900s trails driven by cars were marked by trail associations.[25] Trail associations had named over 250 routes all over the country by the mid-1920s.[26] The markings for trails were confusing for drivers because they were painted on telephone poles, barns, rocks or other surfaces. The routes tended to overlap and suspicion was rising about the intentions of the trail associations because fees were often associated with the areas that had a trail running through them.[27] Due to these concerns as well as increase in vehicles and the increase in states having numbered routes, in 1925, a Joint Board on Interstate Highways was appointed to try and work through a solution to the citizen's concerns.[28] On November 11, 1926, the American Association of State Highway Officials (AASHO) adopted the U.S. numbered highway system.[29] This included designating Rte. 2 in Missouri as U.S. Route 40.

U.S. 40 is a transcontinental highway connecting Wilmington, Delaware, to San Francisco, California. The portion of U.S. 40 which crosses the Blue River where the Blue River Bridge existed was a cut-off section of the road, constructed in 1933. A cut-off was a traffic relief route to reduce the amount of traffic on U.S. 40. U.S. 40 crossed the Blue River further south through the Leeds area.[30] A 1933 article in the *Kansas City Star* stated the new section of road, as the U.S. 40 cutoff, will "not only mean a shortened distance of travel, but it will eliminate the many kinks and turns of the Route as it exists today."[31]

The U.S. 40 cutoff also provided more opportunity for economic development in the area. In February of 1934, a *Raytown News* article stated a "modern fire-proof tourist camp unit" would be built at a new filling station on U.S. 40 cut-off just east of the city limits.[32] The U.S. 40 cutoff today is just U.S. 40 because the U.S. 40 through Leeds is now designated Stadium Drive. Today, U.S. 40 runs parallel and with I-70 at times through Missouri; I-70 was established with the Federal-Aid Highway Act of 1956.[33]

---

[25] Richard Weingroff, "From Names to Number: The Origins of the U.S. Numbered Highway System," Federal Highway Administration, 1997, accessed February 3, 2016 from http://www.fhwa.dot.gov/infrastructure/numbers.cfm .

[26] Ibid.

[27] Ibid.

[28] Ibid.

[29] Ibid.; American Association of State Highway Officials, "United States System of Highways," November 1, 1926, accessed January 29, 2016 from http://texashistory.unt.edu/ark:/67531/metapth298433/m1/1/zoom/ .

[30] United States Geological Survey, "Missouri-Kansas, Kansas City Quadrangle," USGS: 1935, accessed February 3, 2016 from http://store.usgs.gov/b2c_usgs/usgs/maplocator/(ctype=areaDetails&xcm=r3standardpitrex_prd&carea=%24ROOT&layout=6_1_61_48&uiarea=2)/.do .

[31] "A 40 Cutoff Start," *The Kansas City Star*, Kansas City, October 9, 1933, Vol. 54, No. 22, p. 1, Microfilm, State Historical Society of Missouri, Columbia, Missouri.

[32] "Mr. and Mrs. Herman Move: Change in U-Smile Camp Operations Cause," *The Raytown News*, February 1, 1934, Vol. 8, No. 6, p. 1, microfilm, State Historical Society of Missouri, Columbia Missouri.

[33] Weingroff.

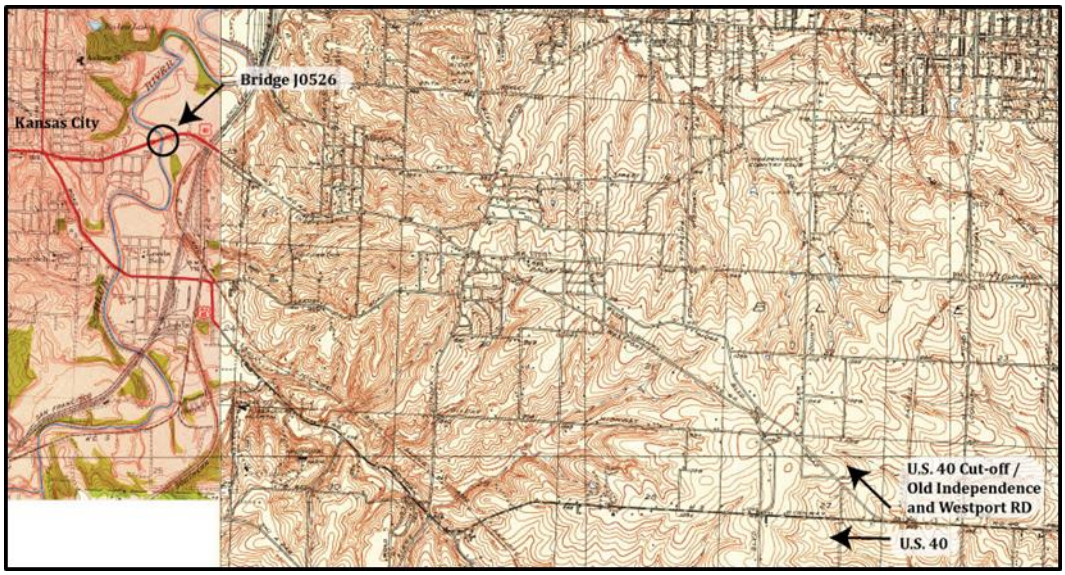

Figure 4: Detail map showing where U.S. 40 cut-off and U.S. 40 diverge. (Drawn by Julia Larson using U.S.G.S. topographic maps from 1934 and 1935).

Plans

On August 11, 1931 the Highway Commission discussed U.S. Route 40 over the Blue River for the first time. It states,

> The recent decision of the Missouri Supreme Court in the Kansas City mandamus case authorizes the Commission to construct new highways within the city limits of Kansas City under the 300-mile provision of Proposition No. 3. He recommended that the Commission designate 1.42 miles from the 300 mile system for the construction of U.S. 40 AP, beginning at Thirty-First Street at Raytown Road and thence in an easterly direction to the east city limits of Kansas City, at a point approximately one hundred and eighty feet north of the Old Independence Westport Rd (See Figure 4).[34]

The "300-mile system," is a reference to Proposition No. 3 passed in 1928, which was an amendment to the State Constitution authorizing the sale of $75,000,000 in additional state road bonds. This would to complete the state highway system and 300 miles of additional state roads including traffic relief roads around Kansas City and St. Louis.[35] In the August meeting, the Commission approved revised detail plans for building bridges on Route 40AP, within the station numbers where the Blue River Bridge was located.[36] Then, in January 1932, the

---

[34] Missouri State Highway Commission. "Minutes of the Meeting of the State Highway Commission, held in Jefferson City, Missouri, August 11, 1931," p. 12-13, as held by the Secretary to the Commission, Missouri Department of Transportation, Jefferson City, Missouri.

[35] Missouri State Highway Commission, *Ninth Biennial Report of the State Highway Commission of Missouri for the Period Ending December 1, 1934*, Jefferson City, MO: Midland Printing Company 1934, p. 106.

[36] Missouri State Highway Commission. "Minutes of the Meeting …August 11, 1931." p. 12-13.

Commission looked at another revision to the detail plans for Route 40AP, specifically discussing "a bridge over Blue River" as one of the improvements being made to Route 40AP.[37]

In August of 1933, the Commission discussed a bridge at the Blue River as an improvement being made to Route 40AP.[38] In between January 1932 and August 1933, the bridge plans were approved. The bridge plans indicate they were designed and drawn in October of 1931 and approved by the State Bridge Engineer and Chief Engineer of the Missouri State Highway Department in March of 1932.[39] While all the funding for the project did not come from the Proposition 3 bonds, it was the catalyst for planning and designing the new U.S. 40 Route. In the *Results of County Planning: Jackson County Missouri*, a map dated to 1932 showed the proposed route of U.S. 40 cutoff as an extension road (See Figure 5). As seen in Figure 4, the U.S. 40 cutoff followed the existing Independence / Westport Road, up to a couple hundred feet east of the Kansas City limits. The Independence / Westport Road was dirt at the time of construction and with the U.S. 40 cutoff, part of the improvements was grading, excavation and Portland cement concrete on the road.[40]

Figure 5: Roads with no inner fill are dirt roads, black filled are hard surfaced highways. The dotted line near the center of the picture on the yellow line is U.S. 40 cut-off plans. (Greater Kansas City Regional Plan Association, "Regional Map of Greater Kansas City," March 1932, Jackson County Missouri, *Results of County Planning: Jackson County Missouri*, Gallup Map & Supply Co.: 1933).

[37] Missouri State Highway Commission. "Minutes of the Meeting of the State Highway Commission, held in Jefferson City, Missouri, January 12, 1932," p. 53, as held by the Secretary to the Commission, Missouri Department of Transportation, Jefferson City, Missouri.

[38] Missouri State Highway Commission. "Minutes of the Meeting of the State Highway Commission, held in Jefferson City, Missouri, August 12, 1933," p. 72, as held by the Secretary to the Commission, Missouri Department of Transportation, Jefferson City, Missouri.

[39] Missouri State Highway Department, "Bridge over Blue River, Proj. No. N.R.M. 352A (U.S. 40AP) STA 37+25, plans," March 1930, Bridge Division, Missouri Department of Transportation, Jefferson City, Missouri.

[40] Missouri Department of Transportation, "Jackson County Project History Maps: Rt. 40 History," accessed March 9, 2016 from http://www.modot.org/business/contractor_resources/ProjectHistoryMaps.htm.

The design for the overall project, NRM 352A, included three "viaducts," one over the Blue River, one over Topping Avenue and one to span the tracks of the Frisco, the Missouri Pacific, the Kansas City Southern and the Rock Island railroads (See Figure 6).[41] The 1933 Topping Ave Bridge is extant with its lattice railing (Bridge K0354),[42] the Blue River Bridge was replaced in 2015 and the railroad track bridge was replaced in 1991.[43]

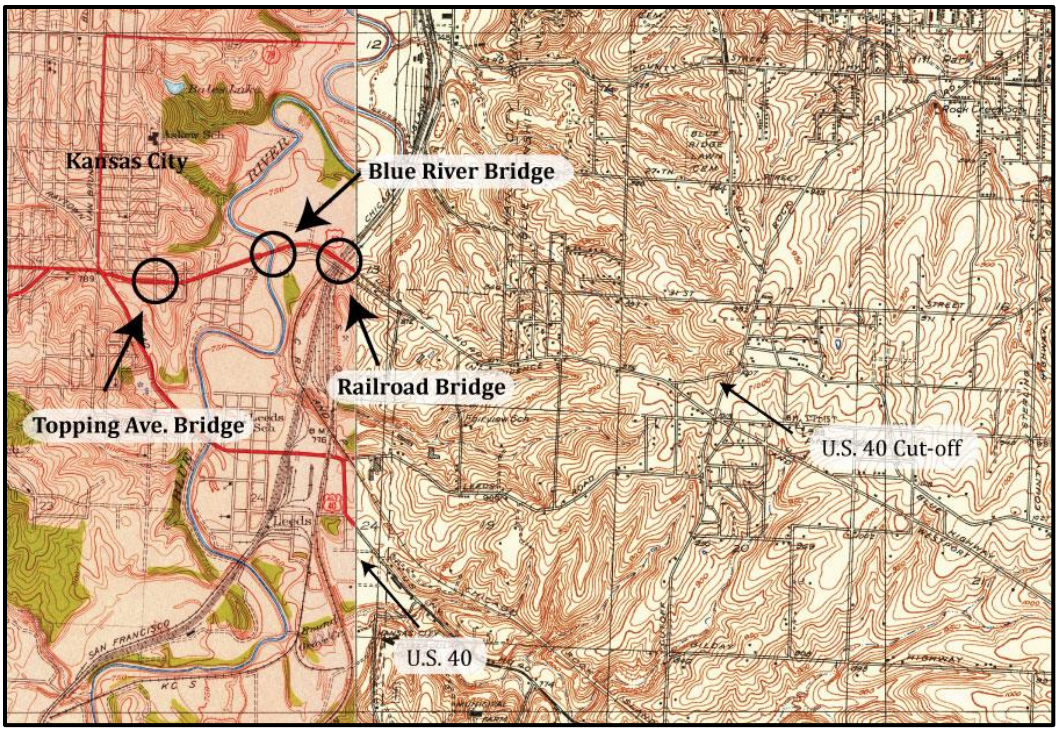

Figure 6: Location of all three bridges for the project NRM 352A. (Notation added by Julia Larson from a 1934 and 1935 U.S.G.S. Topographic Map).

Design: History of the Tied Arch

According to the *Context for Common Historic Bridge Types*, steel arch types are fixed, hinged or tied.[44] The Blue River Bridge is a through, steel, tied arch. The tied arch is a descendent of the "bowstring" truss of the mid-nineteenth century.[45] According to Clayton Fraser, tied arches were used for a century before the Blue River Bridge was built beginning with the bowstring

[41] "A 40 Cutoff Start," *The Kansas City Star*.

[42] Google.com, Google street view, image capture August 2015, accessed March 18, 2016 from google.com.

[43] Missouri Highway and Transportation Commission, "Bridge over St. L.S.W., B.N., Mo. Pac., K.C.S., and Private Railroads, Project No. F.A.-3934, Job No. 4U-751-40, Bridge A-4974," March 6, 1991, Design Division, Missouri Department of Transportation, Jefferson City, MO.

[44] Parsons Brinckerhoff and Engineering and Industrial Heritage, *A Context for Common Historic Bridge Types*, NCHRP Project 25-25, Task 15, Washington D.C.: National Cooperative Highway Research Program, October 2005, p. 3-69.

[45] Parsons Brinckerhoff and Engineering and Industrial Heritage, p. 3-69.

arch-truss patented by Squire Whipple in 1840.[46] Whipple's bowstring overhead truss was made of cast-iron with intermediate members of wrought iron.[47] The 1860s and 70s brought bowstrings to Missouri but were replaced with pinned Pratt trusses as the standard bridge for "medium and long-span wagon bridges in Missouri" in the 1880s.[48] Fraser found in the 1930s timber and steel beam spans became standard designs for the Highway Department.[49] He stated, "Special designs [were] also necessary for [the] traffic relief program in St. Louis and Kansas City. Stream crossings, railroad grade separations and highway intersections required innovative designs."[50] The 1930s medium-span through trusses were typically rigid-connected Pratt or Parker configurations.[51] The Missouri State Highway Department decided to use the tied arch for the 140' span over the Blue River instead of a typical Pratt or Parker configuration, but the reason for this choice of design is unknown.[52] This bridge type is inferred as chosen because the construction does not require large abutments; the structural element ties the ends of the arch together. Horizontal reactions for the bridge are transferred through horizontal ties connecting the ends of the arch together or the ties are a tension member, similar to a bowstring.[53]

Present day, not many tied arch bridges exist. A search of Bridgehunter.com yielded fourteen extant tied arch bridges built from 1926-1960 and twenty-four built from 1960-2008.[54] Of the thirty-eight bridges, thirteen were built in Oregon, eight in Washington, and one in Missouri, the Broadway Bridge in Jackson County.[55] Upon further investigation, Missouri has a total of nine extant tied arch bridges: the Broadway Bridge in Jackson County, the pair of Page Avenue Bridges in St. Louis County (1999), the pair of U.S. 54 Jefferson City bridges (1955 and 1991) in

---

[46] Fraser, *Missouri Historic Bridge Inventory (Draft)*, "Blue River Bridge Data Sheet."

[47] Blaine Whipple, "America's Railroads and Skyscrapers indebted to Civil Engineering: Squire Whipple," 1998, p. 106, accessed on February 2 from http://www.whipple.org/blaine/squire.html.

[48] Fraser, *Missouri Historic Bridge Inventory (Draft)*, "Blue River Bridge Data Sheet."; Clayton Fraser, "Gill Bridge," HAER No. MO-94 National Park Service, March 1996, accessed February 11, 2016 from http://www.loc.gov/pictures/item/mo1810/.; Clayton Fraser, *Missouri Historic Bridge Inventory (Draft)*, Loveland, CO: Fraserdesign, 1996.

[49] Fraser, *Missouri Historic Bridge Inventory (Draft)*, p. 29.

[50] Ibid. p. 30.

[51] Ibid., p. 30.

[52] Fraser, *Missouri Historic Bridge Inventory (Draft)*, "Blue River Bridge Data Sheet."

[53] U.S. Department of Transportation, Federal Highway Administration (FHWA), *Bridge Inspector's Reference Manual*, FHWA NHI Publication No. 03-002, Vol. 2, October 2002, revised December 2006, p. 8.8.11.

[54] James Baughn and contributors, search for tied arch bridges, Bridghunter.com, accessed February 11, 2016 http://bridgehunter.com/category/tag/tied-arch/.

[55] Baughn.

Cole County, the pair of Jefferson Barracks bridges (1984 and 1990) in St. Louis County, and Meramec River MO 21 Bridge (1940) in St. Louis County.[56]

The tied arch has a history of having structural issues making it more popular for its aesthetics over structural capabilities. In 1978, the Federal Highway Administration released a Technical Advisory about problems associated with tied arch bridges to emphasize evaluations of alternative designs for the bridges.[57] Some of the issues include lamellar tearing in the hanger connections to the arch rib and cracking at the weld details and weld cracking in the tie girder at floor beam locations.[58] The tied arch is also "one of the most nonredundant structures," which means two tie girders accommodate the total thrust imposed by the arch ribs, or there are minimal alternative load paths if one fails.[59] The *Historic Context for Common Historic Bridge Types* states shorter spans (30-50') of tied arches were predominately constructed in the 1930s.[60] Longer spans ranging from 180 to over 900 feet are a more modern form.[61] The Blue River Bridge has seven approach spans and one main span of 140 feet making it a rare instance of a long span built before "modern" times. Examples of steel tied arches built before 1955 include the Blue River Bridge, the West End-North Side Bridge (1932) in Allegheny County PA, and the John McLoughlin Bridge (1933) in Oregon among others. [62]

Funding

A 1933 *Kansas City Star* article stated U.S. 40 as "potentially Kansas City's most important motor vehicle traffic artery."[63] The specific artery of U.S. 40 the Blue River Bridge carries has a design and construction history dating back to the 1920s. In addition to funding from Proposition 3, funding was also influenced by monies received due to the Great Depression.[64] Due to massive industrial production loss and job loss, President Roosevelt signed the National

---

[56] See following for the bridges and their official bridge numbers designated by the Missouri Department of Transportation, Transportation Management System; Broadway Bridge (MoDOT Bridge No. A4649), Page Avenue Bridges (MoDOT Bridge No. A5585), Pair of U.S. 54 Jefferson City bridges (MoDOT Bridge Nos. L0550 & A4497), Jefferson Barracks Bridge (MoDOT Bridge Nos. A1850 & A4936), and Meramec River MO 21 Bridge (MoDOT Bridge No. K0637).

[57] W. J. Wilkes, Federal Highway Administration, U.S. Department of Transportation, "Technical Advisory: Tied Arch Bridges," T 5140.4, September 28, 1978, accessed February 11, 2016 from http://www.fhwa.dot.gov/bridge/t514004.cfm.

[58] Ibid.

[59] Ibid.

[60] Parsons Brinckerhoff and Engineering and Industrial Heritage, p. 3-69.

[61] Ibid.

[62] Ibid.

[63] "A 40 Cutoff Start," *The Kansas City Star*.

[64] History.com, "The Great Depression," accessed January 28, 2016 from http://www.history.com/topics/great-depression.

Industrial Recovery Act of 1933.[65] The states were able to get federal funding for certain projects through the Public Works Administration (PWA).[66] The Blue River Bridge construction was part of one of these PWA projects, under Federal Number NRM 352A. On December 29, 1933, the State Highway Commission discussed, "$2,500,000 of NRH, NRM, and NRS Funds" authorized the Chief Engineer to make a request for the money as soon as possible "under the provisions of Section 204, Title II of the National Industrial Recovery Act."[67] Because the project was labeled "NRM" meaning "National Recovery Municipal," and the State received $2,500,000, it can be deduced that the Bridge was funded by federal funds from the National Recovery Act matched by Proposition 3 state bonds.

Construction

The *Kansas City Star* article from October of 1933 stated the new route for the highway had been paved to within 180 feet of the city limits except it had been delayed due to right of way arrangements (See Figure 7). It stated a condemnation jury turned a verdict and the city council had passed an ordinance toward completing the work when the city manager, H.F. McElroy, suggested a revision.[68] McElroy stated through a traffic check the original plan for creating a viaduct over Raytown road at Thirty-First Street was not as beneficial as they had thought. In turn, the State eliminated the structure and McElroy moved forward with contacting property owners for land for the right of way of the other bridges and roadway. The total savings resulting from eliminating the viaduct and reducing the payments to property owners amounted to $220,000.[69]

On October 9, 1933, Gerard Knutson, the head of one of the firms employed on the project, was quoted as saying machinery and other equipment would be moved the next day to the location.[70] The contract for the project went until July 15 of 1934. Knutson stated "the long time allowance is due to the fact three viaducts are necessary in carrying the completed cutoff over a river, an avenue and four railroads.[71] The *Kansas City Times* also reported the beginning of work on U.S. Highway No. 40 cutoff stating, "A broad parkway will be made by the 3-way intersection. Three viaducts are included in the project…A 40-foot road has been completed from the point 180 feet

---

[65] United States Congress, "National Industrial Recovery Act, H.R. 5755. No. 67. 73d," signed June 16, 1933, accessed January 28, 2016 from http://www.ourdocuments.gov/doc.php?flash=true&doc=66&page=transcript.

[66] Section 204 states, " (a) For the purpose of providing for emergency construction of public highways and related projects, the President is authorized to make grants to the highway departments of the several States in an amount not less than $400,000,000, to be expended by such departments in accordance with the provisions of the Federal Highway Act, approved November 9, 1921… [this] may be used to pay all or any part of the cost of surveys, plans, and of highway and bridge construction," United States Congress, "National Industrial Recovery Act."

[67] Missouri State Highway Commission, "Minutes of the Meeting …December 29, 1933." p. 30.

[68] "A 40 Cutoff Start," *The Kansas City Star*.

[69] Ibid.

[70] Ibid.

[71] Ibid.

VOL. 54. NO. 22.

A 40 CUTOFF START

Contractors Begin Work Tomorrow to Bring This Important Artery Into the City.

THREE BRIDGES TO BUILD

New Road Is to Be Ready by Next July 15, the Contract Let Saturday Provides.

CONCERNS UNITE FOR JOB

The $347,150 Award Includes Spans Over Blue, Topping Avenue and Four Railroads.

The work of completing U. S. highway 40 cutoff, potentially Kansas City's most important motor vehicle traffic artery, is to get under way

Figure 7: Newspaper clipping from 1933. ("A 40 Cutoff Start," *The Kansas City Star*, October 9, 1933, Vol. 54, No. 22, p. 1, microfilm, State Historical Society of Missouri, Columbia, Missouri).

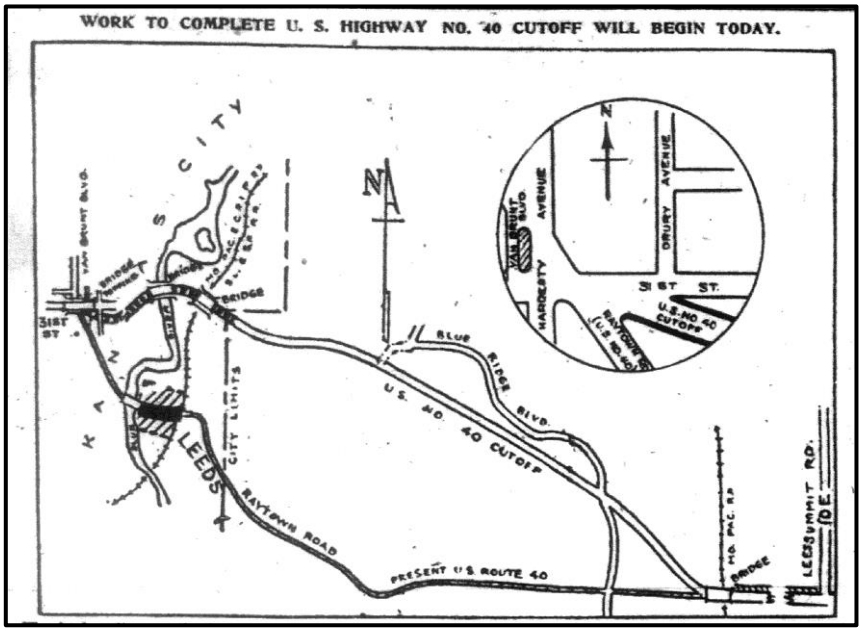

Figure 8: Map of project details. ("Work to Complete U.S. Highway No. 40 Cutoff Will Begin Today," *The Kansas City Times*, October 10, 1933, microfilm, State Historical Society of Missouri, Columbia, Missouri).

east of the city limits to the Missouri Pacific Bridge where the cutoff and the present highway intersect…The work on the cutoff is being done by the state"[72] (See Figure 8).

The *Kansas City Times* stated details on how the new road would affect the old road,

> The present part of the thoroughfare, lying between those points at which the cutoff deviated from it, not only will continue in use, but certain parts of it are to be widened in accordance with a city plan. In fact, the way was cleared only last week by the city for widening that part of it which runs through Leeds. Eventually it is planned to widen the present route of No. 40 from the U-Smile tourist camp to the point where the cutoff comes into the city at Thirty-First Street.[73]

One issue that was mentioned in the *Kansas City Star* multiple times was the State of Missouri not spending its federal funds on highway development quickly enough. The October 9, 1933 article stated the Secretary of State, Ickes, had recently reminded the highway program that they still had $12 million dollars to spend.[74] The public works administrator pointed out "little more than one-third of the amount allotted Missouri under the federal plan had been expended in the highway development in the state."[75] The federal official telegrammed the State to say spending the money would be good for the highways, would relieve the unemployed and would "create added purchasing power [to] citizens."[76] The next day, October 10, the *Star* reported Missouri was being questioned by the federal government as to why road building funds were not being spent more rapidly.[77] The article explains the Highway Commission had just let more than $500,000 in projects including the U.S. 40 cutoff, starting to spend the $12 million.

On October 7, 1933, an award of contract for construction for the project 40AP-NRM 352A was given to Davis Construction Company, Gerard Knutson, and Lay Construction Company for a total of $346,658.99.[78] Yet, the total cost to construct the bridge is mentioned in the *Ninth Biennial Report* as $118,492.30.[79] The Bridge was part of a larger project as shown in the project plans and on the project history maps.[80] An article in the *Kansas City Star* also emphasized the

---

[72] "Work to Complete U.S. Highway No. 40 Cutoff Will Begin Today," *The Kansas City Times*, October 10, 1933, microfilm, State Historical Society of Missouri, Columbia, Missouri.

[73] Ibid.

[74] "A 40 Cutoff Start," *The Kansas City Star*.

[75] Ibid.

[76] Ibid.

[77] "Six U.S. Aid Jobs," *The Kansas City Star*, October 10, 1933, Vol. 54, No. 23, p. 7, microfilm, State Historical Society of Missouri, Columbia, Missouri.

[78] Missouri State Highway Commission, "Minutes of the Meeting …October 7, 1933," p. 12.

[79] Missouri State Highway Commission, *Ninth Biennial Report*, p. 189.

[80] Missouri Department of Transportation, *048 Jackson County*, Sheet 6 of 21, Route 40 Project History, accessed on March 21, 2016 from http://www.modot.org/business/contractor_resources/ProjectHistoryMaps.htm.

cost stating "the contract for the work has been let…stating the expenditure would be $347,150."[81] Equipment had been moved to the location of the project on October 7, 1933 with first bridge was to be started over the four railroads and then the Blue River Bridge next about a week later.[82]

Only one article was found regarding the construction of the Bridge in December of 1933.[83] The *Kansas City Times* printed a picture stating, "the picture shows a coffer dam constructed to permit excavation below the level of the water. The dam keeps out the water while workmen excavate for a pier foundation." The caption stated bridge construction was "going forward rapidly" (See Figure 9).

The exact ending date for construction of the Bridge is unknown after research in the Highway Commission Minutes, the *Biennial Reports*, the *Kansas City Star*, and other local newspapers. The Bridge can be deduced as being completed sometime in the spring of 1934 because it shows up on the 1934 U.S.G.S. topography map and the *Kansas City Star* stated the contract would go to July 15, 1934. A 1934/35 photo shows the completed bridge taken from the Railroad Bridge (See Figure 9). The project may have been completed in sections which did not warrant a large "grand opening" celebration with newspaper coverage. The Commission Minutes listed the final audit of the completed project, on February 11, 1936.[84] The Contract Price was listed at $315,144.54 and the Final Estimate was $311,928.22.[85]

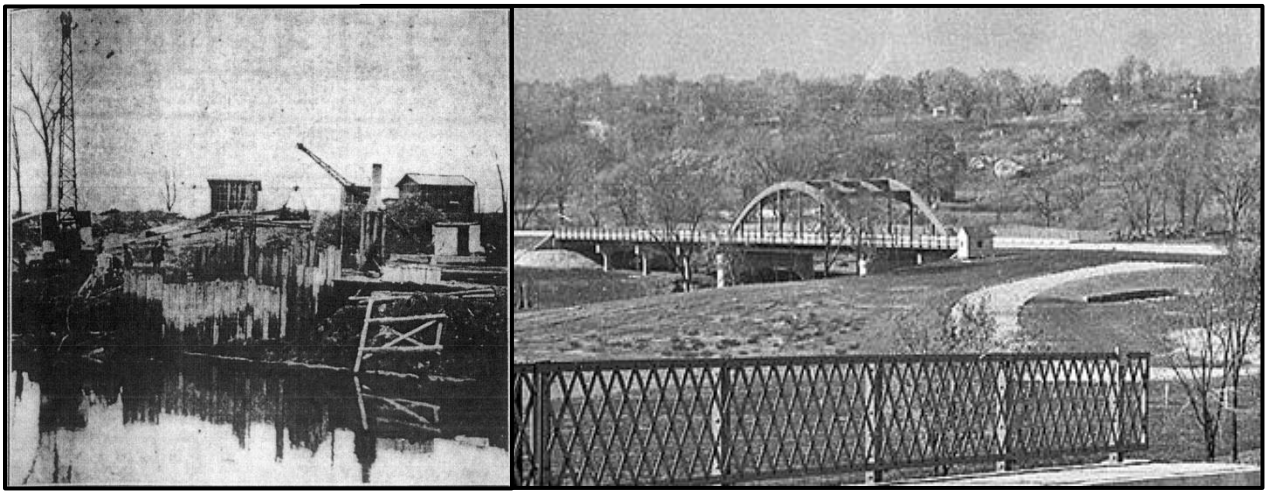

Figure 9: Left: Construction of the Bridge. ("Piers for the Bridge over the Blue River on U.S. Highway No. 40 Cutoff are being Constructed," *The Kansas City Times*, December 2, 1933, p. 3, microfilm, State Historical Society of Missouri, Columbia, Missouri.); Right: Completed Blue River Bridge. (1934/1935 Missouri Department of Transportation Archival Photographs, Missouri Department of Transportation, Jefferson City, MO).

[81] "A 40 Cutoff Start," *The Kansas City Star*.

[82] Ibid.

[83] "Piers for the Bridge over the Blue River on U.S. Highway No. 40 Cutoff are being Constructed," *The Kansas City Times*, December 2, 1933, p. 3, microfilm, State Historical Society of Missouri, Columbia, Missouri.

[84] Missouri State Highway Commission, "Minutes of the Meeting …February 11, 1936," p. 53.

[85] Ibid.

Contractors

Not much information on the contracting companies who built the Blue River Bridge exists. The Correspondence and Construction files on the Bridge were not found at the MoDOT Bridge Division or with the Kansas City District files. This is the same with the project plan files. According to Bridgehunter.com, Davis Construction Company is noted to have worked on three bridges in the state of Missouri during the time frame of 1933-1934.[86] When searched on the Secretary of State's business search, Davis Construction Company completed a "Registration of Fictitious Name" in October of 1925.[87] The Form includes the location of the business, "southeast corner of Sixth and Spring Streets," and the person who filed, "Ellis E. Davis, 416 Seventh, Boonville, MO."[88]

Gerard Knutson is marked as working on three bridges in Missouri during the time frame 1932-1934.[89] Lay Construction Company had also worked on three bridges, which includes the Blue River Bridge; even though Bridgehunter.com has the wrong contractor for them, spelling it "Lam," also spelled incorrectly in Fraser's research.[90] Information about both Gerard Knutson and Lay Construction Company are absent from the Secretary of State online business files. The *Kansas City Star* article stated the addresses of the winning contractors as, Gerard Knutson, 3520 Main Street, the Lay Construction Company, North Kansas City and the Davis Construction Company, Boonville Mo. It also stated they were joint bidders for the work.[91]

When searching the Historic American Engineering Record (HAER), Gerard Knutson's firm is noted as working on the Trail Ridge Road, the highest road in the national park system in 1993, located in Rocky Mountain National Park.[92] The documentation stated the Gerard Knutson firm of Kansas City, MO was awarded a contract of $67,687 for grading and clearing. The project,

---

[86] James Baughn and contributors, Bridghunter.com, "Fishing River US 69 Bridge, and US40 Blue River Bridge," accessed January 29, 2016 from http://bridgehunter.com/scripts/search.cgi?format=simple&query=davis+construction+.

[87] Davis Construction Company, "Registration of Fictitious Name," Missouri Secretary of State, Business Division, October 6, 1925, accessed February 10, 2016 from https://bsd.sos.mo.gov/BusinessEntity/BusinessEntityDetail.aspx?page=beSearch&ID=738838.

[88] Ibid.

[89] James Baughn and contributors, "Medicine Creek MO 6 Bridge, MO6 One Hundred & Two River Bridge, and US40 Blue River Bridge," Bridghunter.com, accessed January 29, 2016 from http://bridgehunter.com/category/builder/gerard-knutson-construction-co/.

[90] James Baughn and contributors, Bridghunter.com, "Little Berger Creek Bridge, Cedar Creek MO 32 Bridge, and US40 Blue River Bridge," accessed January 29, 2016 http://bridgehunter.com/scripts/search.cgi?query=lay+construction; Fraser, *Missouri Historic Bridge Inventory (Draft)*, "Blue River Bridge Data Sheet."

[91] "A 40 Cutoff Start," *The Kansas City Star*.

[92] Richard Quin, "Trail Ridge Road: Rocky Mountain National Park: HAER No. CO-31," Historic American Engineering Record, National Park Service Roads and Bridges Recording Project, August 1993, p. 2, accessed February 3, 2016 from http://www.loc.gov/pictures/collection/hh/item/co0193/.

Kawuneechee Valley to Grand Lake, 1-D-2, the final segment of the Trail Ridge Road, began in June 1941 and was formally completed on September 15, 1941.[93]

Davis Construction Company and Gerard Knutson completed many road projects throughout 1931-1936 because of notation in the Commission Minutes as being awarded contracts and in "final payments to contractors."[94] While not much on the workings of the contractors for the Blue River Bridge exist, it is known they were active with the Highway Department so they were not an unusual choice contractor to choose for the bridge construction.

SIGNIFICANCE

While the construction documents and information regarding the specific bridge construction was not able to be located, resources were exhausted from online sources and newspapers such as the *Kansas City Star*, *Kansas City Times*, *Inter-city News*, *Blue Springs Herald*, *Raytown News* and *Independence Examiner*. Within the MoDOT Transportation Management System (TMS) and the *Missouri Historic Bridge Inventory*, no specific category exists for "tied arches," thus specific numbers and build dates of tied arch bridges on the Missouri state road system are not readily available. According to the *Context for Common Historic Bridges*, steel tied arches were not built in great numbers.[95] They possess significance if character-defining features remain, including the curved top girder or truss, suspenders, ties and the bottom chord and floor system.[96] The Blue River Bridge had a new deck, yet the floor system was still the girder system. The ties, truss and bottom chord remained for the Bridge, making it a significant example of a steel tied arch in Missouri. During the *Missouri Historic Bridge Inventory* Bridge J0526 was evaluated as a "unique example in Missouri of uncommon structural type, in well-preserved condition."[97] Fraser stated riveted Parker trusses were the usual design for a 140' steel span, but the Blue River Bridge departed from this practice. The Bridge became an uncommon instance of experimentation by the Missouri State Highway Department, not usually known for such innovations.[98]

---

[93] Richard Quin, "Trail Ridge Road: Rocky Mountain National Park: HAER No. CO-31,"; Richard H. Quin, "Rocky Mountain National Park Roads, HAER No. C0-78," Historic American Engineering Record, National Park Service, 1993, p. 46, accessed February 3, 2016 from http://www.loc.gov/pictures/collection/hh/item/co0351/.

[94] Missouri State Highway Commission. "Minutes of the Meeting of the State Highway Commission, held in Jefferson City, Missouri" various dates throughout 1931-1936, as held by the Secretary to the Commission, Missouri Department of Transportation, Jefferson City, Missouri.

[95] Parsons Brinckerhoff and Engineering and Industrial Heritage, p. 3-69.

[96] Ibid.

[97] Fraser, *Missouri Historic Bridge Inventory (Draft)*, "Blue River Bridge Data Sheet."

[98] Ibid.

PHYSICAL BRIDGE DESCRIPTION

Overview

The Blue River Bridge (J0526) crosses the Blue River on U.S. 40 in Jackson County. The Bridge was a steel, rigid-connected tied arch, with steel stringer approach spans. The Bridge consisted of seven spans including 48’, 47’, 47’ and 48’ approach spans from the west and two 48’ approach spans from the east. The main span, Span 5, measured 140’. The entire superstructure was 430’ long with a 40’ roadway flanked by 5’-7’ sidewalks on either side. The following description of the Blue River Bridge is based on the original design plans from 1931 (See Figure 10).

Substructure

The substructure of the Blue River Bridge consisted of reinforced concrete abutments and piers founded on spread footings and piles. The west Abutment (No. 1) included a footing atop seven 40’ concrete piles driven to rock. The stub abutment included a poured concrete wingwall, backwall and ledge for the bridge seat (See Photo Plate #11). The abutment was dressed with a light stone revetment at a 1.5:1 slope from the natural ground line up to the abutment (see Plans Sheet No. 1). The bridge had no skew.

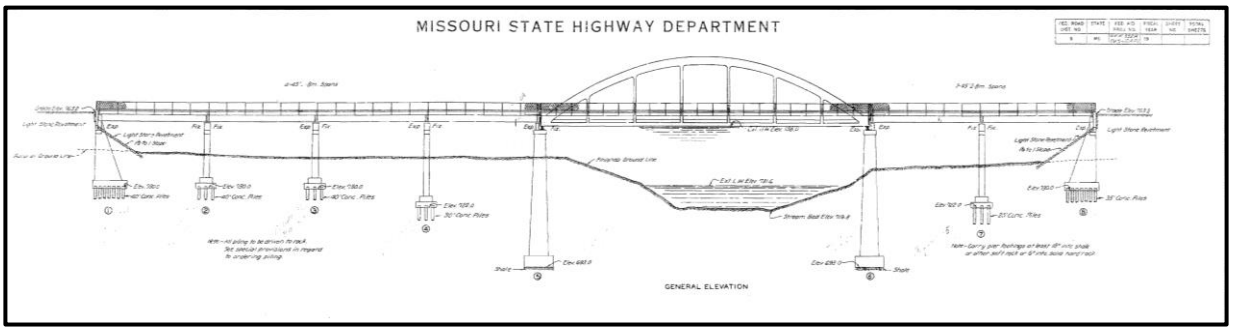

Figure 10: Elevation of Blue River Bridge. (Missouri State Highway Department, “Bridge over Blue River, Proj. No. N.R.M. 352A (U.S. 40AP) STA 37+25,” Bridge Division, Missouri Department of Transportation, Jefferson City, Missouri).

Bents No. 2, 3, 4, and 7 were designed similarly except for their depth (See Figure 10). Each bent consisted of three reinforced concrete piles. Each pile was separated 17’ on center. The reinforced concrete pile footings on the north and south were rectangular and 9’ long x 6’wide and the center pile is 8’3” wide. Each footing also had three reinforced concrete piles driven to rock. Each pile in Bents 2, 3, 4, and 7 had a width of 2’6” square. Piles were haunched to meet the bent cap (See Photo Plate #4).

Piers No. 5 and 6 were of a similar open bent design. Each bent consisted of two round columns with a 5’ tall rectangular footing. Each column base had a diameter of 8’ and was battered at 3/8” every 1’. Each column also had fluting with 28, ½” deep flutes at 2’ centers (see Plan Sheet No. 2). The columns in Pier 5 were 58’5” tall and in Pier 6 were 58’ tall from the footings to tops of the column where it met the oval-shaped bent caps. Each column was 43’ on center from the other. In between each column was a reinforced concrete shear reinforcement arch or a partial web wall (See Photo Plate #3). The arch was 38’ wide and extended 12’3” below the bent cap.

Abutment (No. 8) on the east end of the Bridge was reinforced concrete. The footing consisted of seven 35' concrete piles driven to rock. Similar to the west end, the stub abutment had a wingwall, backwall, abutment stem and dressed with a light stone revetment at a 1.5:1 slope.

Superstructure

Approach Spans
The superstructure of the approach spans of the Bridge came from standardized plan S918R, which is no longer available. As noted from photographic documentation and the plans from the 1991 rehabilitation, the decking was four approach spans (1-4) from the west and two from the east (6-7) consisting of seven steel I-beam stringers. Each span was 48,' 47,' 47' and 48' respectfully from the west and from the east were both 48' long. The roadway was built with two lanes, was 40' wide and had 5'4" sidewalks with a 5" curb on each side. On spans one through four, six and seven a sidewalk cantilevered out from the Bridge. The handrails along the sidewalks were lattice guardrails with two intermediate handrail posts in each panel of truss span all riveted together (See Figure 9). When the Bridge was disassembled, the original lattice handrails were gone, a Thrie beam guard rail and chain-link fence had been installed and bordered the sidewalks, and the deck included four 10' lanes (See Photo Plate #12).[99]

Main Span
Span 5 was the main span consisting of a steel, rigid-connected tied arch. The arch was a riveted thru truss and consisted of seven panels each 20' in length. The floor system consisted of ten stringer beams including cross lower lateral bracing with floor beams tied to the hangers on the lower chord (See Photo Plate #7). The deck included a stringer camber curve with the center of the deck having a maximum 6" pitch above the horizontal. The main span originally opened wider than the approach spans at the deck level sidewalks with a 7'5" sidewalk with 4" curbs on the north and south side of the truss, cantilevered from the bridge.

The through tied arch consisted of a lower chord of four built up angles with web plates. The hangers for the Bridge consisted of steel built-up I-beams riveted to the floor beams. The built-up beams included four angle pieces with metal web plates. The base of the arch has a slight camber being 1 5/8" at the center. The end of the arch met Piers 5 and 6 with an expansion shoe on the east end and fixed shoes on the west ends. Each hanger was connected to the floor beam with gusset plates and to the arch rib with a gusset plate. The six hangers were 13' 11", 23' 2" and 27' 9" tall and the same mirrored on the other side.

The through tied arch consisted of two built up box beam arch ribs with slotted cover plates. The box beam was built by riveting together angles and web plates to form a double stacked box. The webs were detailed with 12" x 7" elongated circular openings separated with a distance of 2'6" on center (See Plans Page 6). The sway frame included lateral bracing consisting of four longitudinal struts comprised of plate girders. The highest point between the deck and the top of the arch was the geometric height of 28'6". The maximum clearance for the through truss was 15'3".

[99]Missouri Highway and Transportation Commission, "Repairs to Bridge over Blue River."

Modifications

Modifications to the original 1933 design were made in 1991. The existing deck on the main span was removed and a polymer concrete overlay deck was added with a steel grid floor, half concrete filled. Slab draining was added as well. During this time, piers were repaired by removing some existing concrete and reinforcement and reforming them to match the structure. The original sidewalk bracket structure was removed and replaced with a concrete slab attached sidewalk. The Thrie beam rail added, three light poles added and chain-link fence added around the sidewalks.

Figure 11: Deconstruction of Blue River Bridge in 2014. (Missouri Department of Transportation, "Manchester Bridge," accessed on March 8, 2016 from MoDOT Flickr website, https://www.flickr.com/photos/modot_kc/sets/72157634494963367/with/15416067250/).

RELOCATION

The Blue River Bridge was a part of the $63.7 million Manchester Trafficway from 2013-2015.[100] The Bridge was officially closed by MoDOT on August 14, 2014 due to an inspection that revealed critical deterioration to the structure. It carried 11,000 vehicles a day at the time.[101] The contractors for the entire Manchester Trafficway project were Clarkson Construction

[100] Missouri Department of Transportation, "Manchester Bridge Project," accessed February 25, 2016 from http://www.modot.org/kansascity/major_projects/ManchesterBridgeatI-70.htm.

[101] Missouri Department of Transportation, "U.S. Highway 40 Bridge Over Blue River Closing Tonight," August 14, 2014, accessed February 25, 2016 from http://www.modot.gov/kansascity/newrelease/District4Release.shtml?action=displaySSI&newsId=197563.

Company and HNTB Corporation.[102] The Bridge was deconstructed (See Figure 11)[103] and replaced with a continuous composite prestressed concrete bridge with NU girder spans designed to support 80,000 pounds and include new pedestrian and bike paths.[104] The new Blue River Bridge (A8259) was opened Friday, April 2, 2015.[105]

The Blue River Bridge will be relocated to Tail and Trails Dog Park east of Byars Road in Grandview, MO and will connect the park to the Longview Lake Trail (See Figure 12).[106] The Bridge's relocation was funded by a $350,000 Federal Transportation Alternatives Program grant and other grants the City can acquire.[107] The 1933 Bridge superstructure is currently being stored at Tail and Trails Dog Park and the City of Grandview's goal is finishing the project in 2017 (See Figure 13).[108]

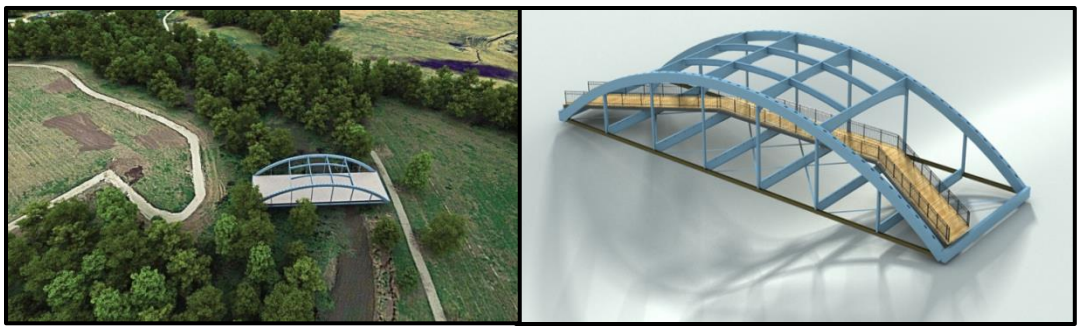

Figure 12: Rendering of how the Blue River Bridge will look at its replacement site. (Jodi Martin, "Historic Bridge Reuse in the Heartland," *The Municipal*, February 17, 2015, accessed February 25, 2016 from http://www.themunicipal.com/2015/02/historic-bridge-reuse-in-theheartland/; Rendering on the right from City of Grandview, received March 9, 2016).

---

[102] Austin Alonzo, "U.S. 40 Bridge over Blue River will be replaced," *Kansas City Business Journal*, July 25, 2013, accessed February 25, 2016 from http://www.bizjournals.com/kansascity/news/2013/07/25/us-40-bridge-over-blue-river-replaced.html.

[103] Pictures of the disassembly can be found on MoDOT's Flickr website. https://www.flickr.com/photos/modot_kc/sets/72157634494963367/page2/

[104] Alonzo, "U.S. 40 Bridge over Blue River will be replaced."; Missouri Highways and Transportation Commission, "Bridge: US-40 Over Blue River."

[105] Markl Johnson, Missouri Department of Transportation, "Route 40 Bridge set to open over the weekend," Jackson County, April 1, 2015, accessed February 25, 2016 from http://www.modot.mo.gov/kansascity/newrelease/District4Release.shtml?action=displaySSI&newsId=201015.; Kerri Stowell, "40 Highway bridge set to reopen prior to opening day at the K," (Kansas City), Fox 4 News: April 3, 2015, accessed February 25, 2016 from http://fox4kc.com/2015/04/03/40-highway-bridge-set-to-reopen-prior-to-opening-day-at-the-k/ .

[106] Jodi Martin, "Historic Bridge Reuse in the Heartland," *The Municipal*, February 17, 2015, accessed February 25, 2016 from http://www.themunicipal.com/2015/02/historic-bridge-reuse-in-the-heartland/ .

[107] Martin, "Historic Bridge Reuse in the Heartland."

[108] Michelle Pekarsky, "Historic Route 40 bridge moved to Grandview to become walking bridge," Fox News WDAF-TV, Kansas City, accessed on September 15, 2015, from http://fox4kc.com/2015/09/15/historic-route-40-bridge-moved-to-grandview-to-become-walking-bridge/.

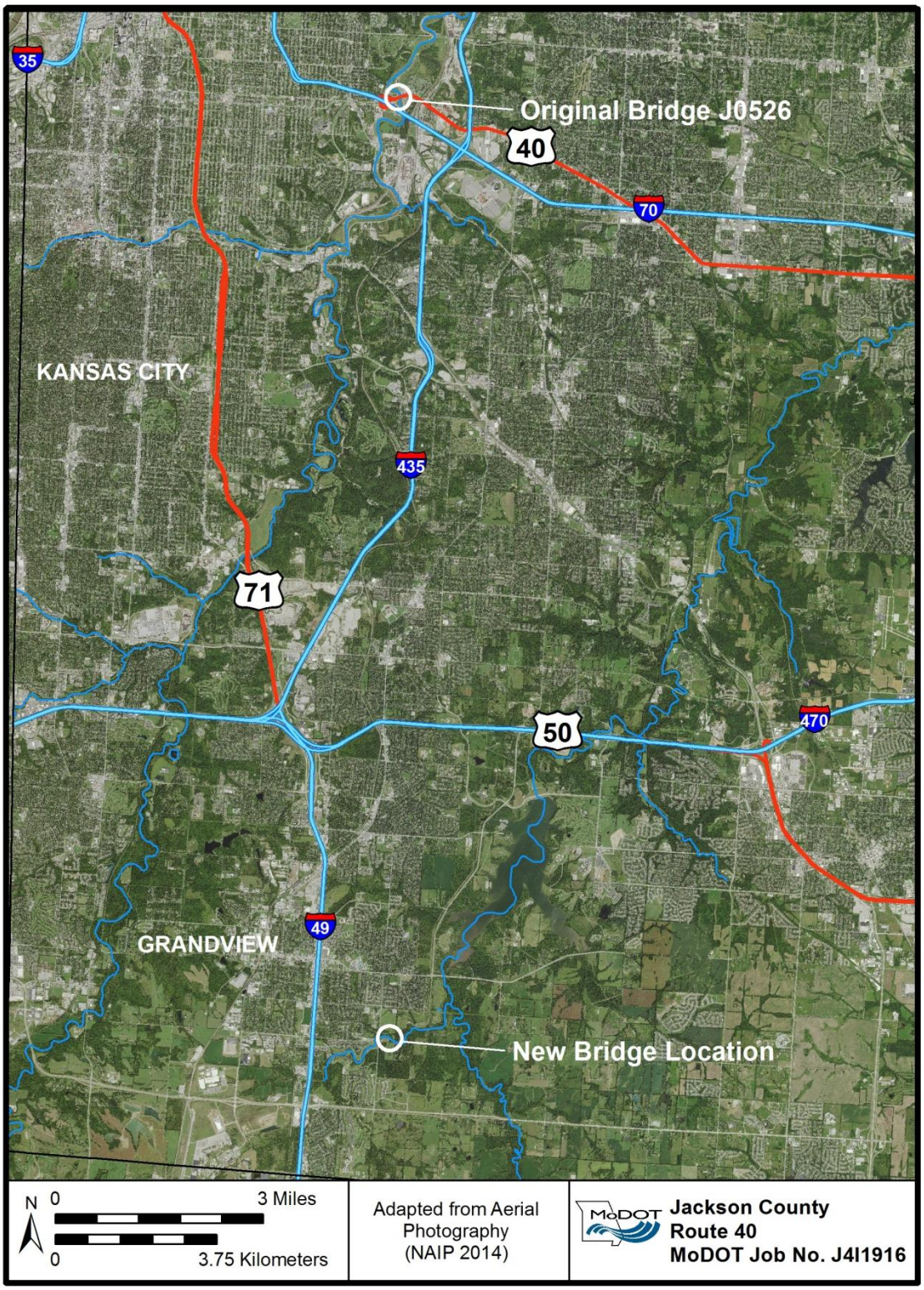

Figure 13: New location for the Blue River Bridge. (Map created by Julia Larson using ArcGIS, created March 3, 2016).

Bibliography

Alley, Patrick and Dona Boley. *Images of America: Kansas City's Parks and Boulevards*. Charleston, SC: Arcadia Publishing, 2014.

Alonzo, Austin. "U.S. 40 Bridge over Blue River will be replaced." *Kansas City Business Journal*. July 25, 2013. Accessed February 25, 2016 from http://www.bizjournals.com/kansascity/news/2013/07/25/us-40-bridge-over-blue-river-replaced.html.

American Association of State Highway Officials. "United States System of Highways." November 1, 1926. Accessed January 29, 2016 from http://texashistory.unt.edu/ark:/67531/metapth298433/m1/1/zoom/.

Baughn, James and contributors. Bridgehunter.com. Search for Davis Construction, Gerard Knutson and Lay Construction

Blue Valley Industrial Association. "About: History." Accessed January 28, 2016 from http://bvia.org/about-2/history/.

Brinckerhoff, Parsons and Engineering and Industrial Heritage. *A Context for Common Historic Bridge Types*. NCHRP Project 25-25, Task 15. Washington D.C.: National Cooperative Highway Research Program, October 2005.

Davis Construction Company. "Registration of Fictitious Name." October 6, 1925. Missouri Secretary of State. Business Services. Accessed February 10, 2016 from https://bsd.sos.mo.gov/BusinessEntity/BusinessEntityDetail.aspx?page=beSearch&ID=738838.

Epson. "Permanence ratings from Wilhelm Imaging Research." Accessed April 30, 2009 from www.epson.com/pdf/LightfastCPD_15334R2.pdf.

Fraser, Clayton. *Missouri Historic Bridge Inventory (Draft)*."Blue River Bridge Data Sheet." Loveland, CO: Fraserdesign, 1996. Available at Historic Preservation Section, Missouri Department of Transportation, Jefferson City, Missouri.

_____. *Missouri Historic Bridge Inventory (Draft*). Loveland, CO: Fraserdesign, 1996.

_____. "Gill Bridge." HAER No. MO-94 National Park Service. March 1996. Accessed February 11, 2016 from http://www.loc.gov/pictures/item/mo1810/.

Gibson, Sonny. *Kansas City: Mecca of the New Negro*. Kansas City, MO: Mecca Enterprises, 1997. Accessed January 28, 2016 from http://www.duboislc.org/content/historical-look-african-americans-greater-kansas-city.

History.com. "The Great Depression." Accessed January 28, 2016 from http://www.history.com/topics/great-depression.

Jackson, David. *Kansas City Chronicles: An Up-to-Date History*. Charleston, SC: The History Press, 2010. Accessed February 3, 2016 from https://books.google.com/.

Johnson, Markl. "Route 40 Bridge set to open over the weekend." Missouri Department of Transportation. Jackson County. April 1, 2015. Accessed February 25, 2016 from http://www.modot.mo.gov/kansascity/newrelease/District4Release.shtml?action=displaySSI&newsId=201015.

Kansas City Industrial Council. "Industrial Areas: Map." Accessed January 28, 2016 from http://www.kciconline.com/industrial-areas/map/.

Kansas City Star, The. (Weekly and Daily). Microfilm. State Historical Society of Missouri, Columbia, Missouri.

Kansas City Times, The. (Daily). Microfilm. State Historical Society of Missouri, Columbia, Missouri.

Martin, Jodi. "Historic Bridge Reuse in the Heartland." *The Municipal*. February 17, 2015. Accessed February 25, 2016 from http://www.themunicipal.com/2015/02/historic-bridge-reuse-in-the-heartland/.

McNally, Rand and Company. *AutoTrails Map, Missouri, Arkansas, Kentucky, Tennessee.* Chicago: Rand McNally & Company, 1924. Accessed January 29, 2016 from http://www.davidrumsey.com/.

Missouri Department of Transportation. "Manchester Bridge Project." Accessed February 25, 2016 from http://www.modot.org/kansascity/major_projects/ManchesterBridgeatI-70.htm.

_____. "Jackson County Project History Maps: Rt. 40 History." Accessed March 9, 2016 from http://www.modot.org/business/contractor_resources/ProjectHistoryMaps.htm.

_____. "U.S. Highway 40 Bridge Over Blue River Closing Tonight." August 14, 2014. Accessed February 25, 2016 from http://www.modot.gov/kansascity/newrelease/District4Release.shtml?action=displaySSI&newsId=197563.

Missouri Highway and Transportation Commission. "Bridge over St. L.S.W., B.N., Mo. Pac., K.C.S., and Private Railroads, Project No. F.A.-3934, Job No. 4U-751-40, Bridge A-4974." March 6, 1991. Design Division, Missouri Department of Transportation, Jefferson City, MO.

_____. "Repairs to Bridge over Blue River, Project No. FA-3334 (410). Job No. 4U 751-40. Rt. 40, plans." March 1991. Bridge Division, Missouri Department of Transportation, Jefferson City, Missouri.

Missouri Highways and Transportation Commission. "Bridge: US-40 Over Blue River, Job No. J4I1916, plans." May 2014. Design Division, Missouri Department of Transportation, Jefferson City, Missouri.

Missouri State Highway Commission. *Fourth Biennial Report of the State Highway Commission of Missouri for the Period Ending December1, 1924*. "Map of Missouri Showing- State Highway System of 7640 Miles and Route Numbers." Map approved September 19, 1922. Jefferson City, MO: Hugh Stephens Press, 1924.

_____. "Minutes." Various dates. As held by the Secretary to the Commission, Missouri Department of Transportation, Jefferson City, Missouri.

_____. *Ninth Biennial Report of the State Highway Commission of Missouri for the Period Ending December 1, 1934*. Jefferson City, MO: Midland Printing Company, 1934.

_____. *Third Biennial Report of the State Highway Commission of Missouri for the Period Ending December 1, 1922*. Jefferson City, MO: No publisher, 1922.

Missouri State Highway Department. "Bridge over Blue River, Proj. No. N.R.M. 352A (U.S. 40AP) STA 37+25, plans." March 1932. Bridge Division, Missouri Department of Transportation, Jefferson City, Missouri.

National Register of Historic Places. "National Register Photo Policy Factsheet updated 5/15/2013." National Park Service Web-site, accessed August 01, 2013 (http://www.nps.gov/history/nr/bulletins/photopolicy/index.htm.

Pekarsky, Michelle. "Historic Route 40 bridge moved to Grandview to become walking bridge." Fox News WDAF-TV (Kansas City). September 15, 2015.Accessed on February 13, 2016 from http://fox4kc.com/2015/09/15/historic-route-40-bridge-moved-to-grandview-to-become-walking-bridge/.

Quin, Richard. "Trail Ridge Road: Rocky Mountain National Park: HAER No. CO-31." Historic American Engineering Record. National Park Service Roads and Bridges Recording Project. August 1993. Accessed February 3, 2016 from http://www.loc.gov/pictures/collection/hh/item/co0193/.

Quin, Richard H. "Rocky Mountain National Park Roads, NAER No. C0-78." Historic American Engineering Record. National Park Service. 1993. Accessed February 3, 2016 from http://www.loc.gov/pictures/collection/hh/item/co0351/.

Raytown News, The. Microfilm. State Historical Society of Missouri, Columbia, Missouri.

Rothwell, Dan A. *Along the Boone's Lick Road: Missouri's Contribution to Our First Transcontinental Route, U.S. Highway 40*. Chesterfield MO: Young at Heart Publishing Company and St. Charles, MO: Greater St. Charles Convention & Visitors Bureau, 1999.

Stowell, Kerri. "40 Highway bridge set to reopen prior to opening day at the K." (Kansas City). Fox 4 News: April 3, 2015. Accessed February 25, 2016 from http://fox4kc.com/2015/04/03/40-highway-bridge-set-to-reopen-prior-to-opening-day-at-the-k/.

Sullivan, Kevin, Robert Pulliam, Gregory Pitchford and Philip Jefferies. "Location." Missouri Department of Conservation. March 22, 2011. Accessed on January 15, 2016 from http://mdc.mo.gov/category/editorial-tags/blue-river?page=2.

"Touring the New Victory Highway." *Concrete Highway Magazine*. Vol. VIII. No. 4. Chicago, IL: Portland Cement Association, April 1924. Accessed February 11, 2016 from https://archive.org/stream/concretehighwaym00portrich#page/94/mode/2up/search/missouri.

Union Historical Company. *The History of Jackson County, Missouri*. Kansas City MO: Union Historical Company, Birdsall, Williams, & Co., 1881. Accessed February 3, 2015 from https://books.google.com/books?id=eMMUAAAAYAAJ&printsec=frontcover&source=gbs_ge_summary_r&cad=0#v=onepage&q&f=false.

United States Congress. "National Industrial Recovery Act, H.R. 5755. No. 67. 73d." Signed June 16, 1933. Accessed January 28, 2016 from http://www.ourdocuments.gov/doc.php?flash=true&doc=66&page=transcript.

United States Department of Transportation. Federal Highway Administration (FHWA). *Bridge Inspector's Reference Manual*. FHWA NHI Publication No. 03-002. Vol. 2. October 2002. Revised December 2006.

United States Geological Survey. "Feature Detail Report for: Blue River." October 13, 1978. Accessed on January 25, 2016 from http://geonames.usgs.gov/apex/f?p=gnispq:3:0::NO::P3_FID:479576.

_____. "Missouri-Kansas, Kansas City Quadrangle." USGS: 1935. Accessed February 3, 2016 from http://store.usgs.gov/b2c_usgs/usgs/maplocator/(ctype=areaDetails&xcm=r3standardpitrex_prd&carea=%24ROOT&layout=6_1_61_48&uiarea=2)/.do.

Weingroff, Richard. "From Names to Number: The Origins of the U.S. Numbered Highway System." Federal Highway Administration, 1997. Accessed February 3, 2016 from http://www.fhwa.dot.gov/infrastructure/numbers.cfm.

Whipple, Blaine. "America's Railroads and Skyscrapers indebted to Civil Engineering: Squire Whipple." 1998. Accessed on February 2, 2016 from http://www.whipple.org/blaine/squire.html.

Wilkes, W. J. "Technical Advisory: Tied Arch Bridges." Federal Highway Administration. September 28, 1978. Accessed February 11, 2016 from http://www.fhwa.dot.gov/bridge/t514004.cfm.

Writers' Program of the Work Projects Administration in the State of Missouri and Douglas Pappas. *Missouri: A Guide to the "Show Me" State*. New York, NY: Duell, Sloan and Pearce, 1941. Accessed January 27, 2016 from http://babel.hathitrust.org/cgi/pt?id=mdp.39015013091080;view=1up;seq=317.

Appendix A:

Original Bridge Plans

MISSOURI STATE HIGHWAY DEPARTMENT

FED. ROAD DIST. NO.	STATE	FED. AID PROJ. NO.	FISCAL YEAR	SHEET NO.	TOTAL SHEETS
5	MO.	N.R.M. 352-A (U.S. 40AP)	19		

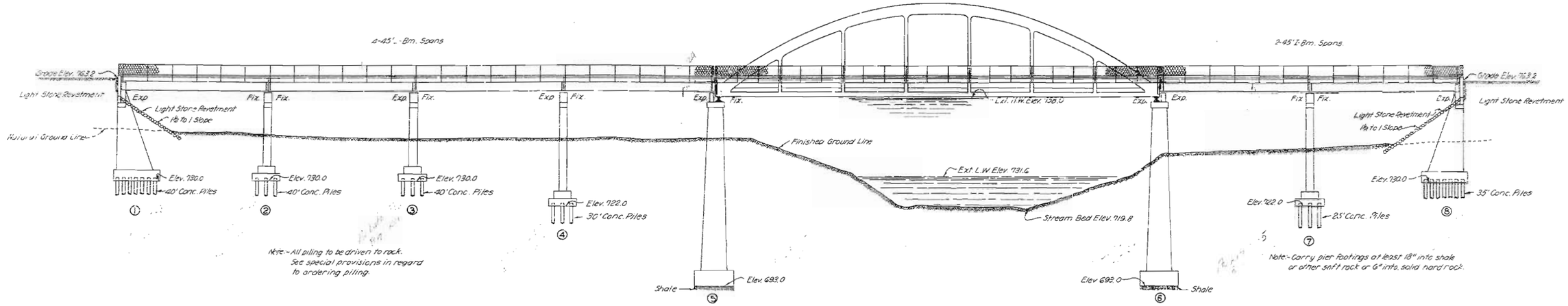

GENERAL ELEVATION

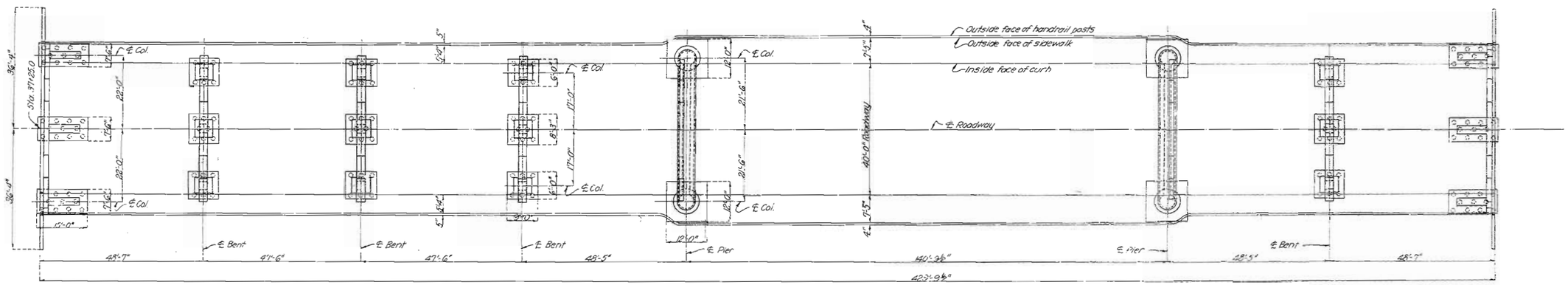

PLAN

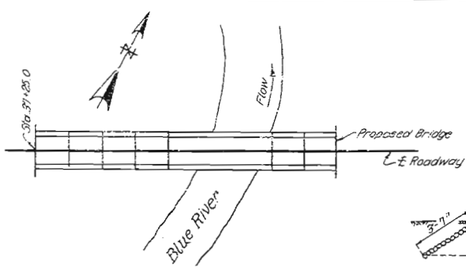

LOCATION SKETCH

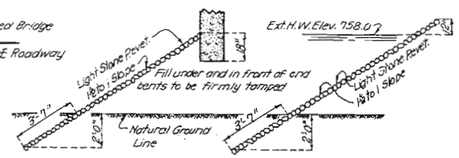

FRONT OF END BENTS — SIDE SLOPES OF FILL

Light stone revetment shall be placed on fills at ends of bridge as shown in sketches.
Approximately 840 square yards of revetment work included in road contract.

LIGHT STONE REVETMENT SKETCHES

ESTIMATED QUANTITIES

ITEM		SUBSTR.	SUPERSTR.	TOTAL
Excavation Class 1	Cu. Yds.	1,230		1,230
Excavation Class 2	Cu. Yds.	1,950		1,950
Concrete Piles	Lin. Ft.	4,137		4,137
Concrete Pile Cut-Offs	Lin. Ft.	438		438
Concrete 1-2-3½ mix. Class "X"	Cu. Yds.		541.8	541.8
Concrete 1-2-4 mix. Class "B"	Cu. Yds.	934.4		934.4
Reinforcing Steel.	Lbs.	61,500	137,270	198,770
Cast Steel - Truss Span	Lbs.		7,000	7,000
Structural Steel Arch Span	Lbs.		397,000	397,000
Structural Steel Approach Spans	Lbs.		388,500	388,500
Handrail	Lin. Ft.		860	860
Bearing Castings - I-Brn. Spans	Lbs.		7,850	7,850

Bridge excavation above elevation 734.0 will be paid for as Class 1 Bridge Excavation.
Bridge excavation below elevation 734.0 will be paid for as Class 2 Bridge Excavation.

GENERAL NOTES:-

Designed under A.A.S.H.O. specifications with modifications.

Loading:- H20.

Miscellaneous:- Concrete in slabs and curbs to be 1-2-3½ mix Class "X". Concrete in substructure to be 1-2-4 mix Class "B".
Exposed edges to be beveled ¾" where no other bevel is noted.
Where bituminous felt is used in expansion or partition joints in concrete, stitch felt in vertical joints securely, to one face of concrete with copper wire.
Two name plates type "19" as shown on Std. S-918R to be furnished and placed by contractor. Cost of name plates to be included in price bid for other items.

Paint:- Shop; None.
Field; Surfaces inaccessible after erection four coats of red lead. No other paint to be applied by contractor. Red lead required shall be furnished by the Contractor. See Special Provisions.

Excavation:- Bridge excavation in accordance with Section I of Standard Specifications issued April 1, 1930 except that quantities paid for will be computed from extreme low water elevation 731.6 where existing ground line is below this elevation.
No fill to be placed against backwall and wings of Bents No. 1 & 8 until after spans 1-2 and 7-8 are completed.

Shop Drawings:- Detail shop drawings for all structural and cast steel shall be submitted to the Missouri State Highway Department in duplicate and shall be approved before steel is fabricated.

B.M. #4 Elev. 742.93 Spike in top of 15" Stump 40' Lt. Sta. 39+50

BRIDGE OVER BLUE RIVER

STATE ROAD FROM KANSAS CITY EAST
ABOUT 2.25 MILES S.W. OF CENTROPOLIS QUARRY
FROJ. NO. N.R.M. 352A (U.S. 40AP) STA. 37+25

JACKSON COUNTY

SUBMITTED BY N. B. Gay DATE 3/8/32 BRIDGE ENGINEER
APPROVED BY L. H. Hurley DATE 3/8/32 CHIEF ENGINEER

S-918R
J-526

Designed Oct. 1931 By H.H.M.
Drawn Oct. 1931 By H.H.M.
Traced Oct. 1931 By H.E.C.
Checked Dec. 1931 By F.W.H.

Sheet No. 1 of 6

F.A.

MISSOURI STATE HIGHWAY DEPARTMENT

FED. ROAD DIST. NO.	STATE	FED. AID PROJ. NO.	FISCAL YEAR	SHEET NO.	TOTAL SHEETS
5	MO.	N.R.M. 352 A (U.S. 40 A P.)	19		

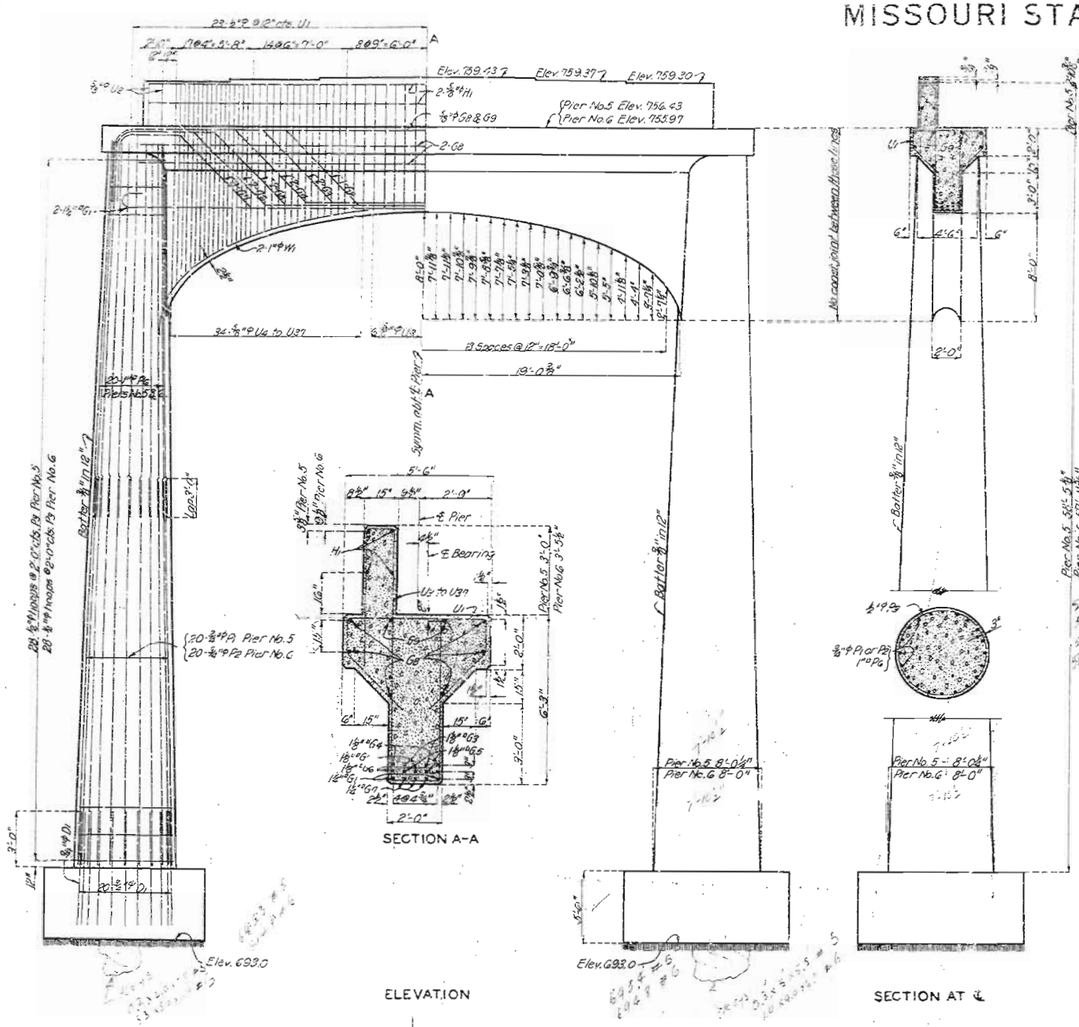

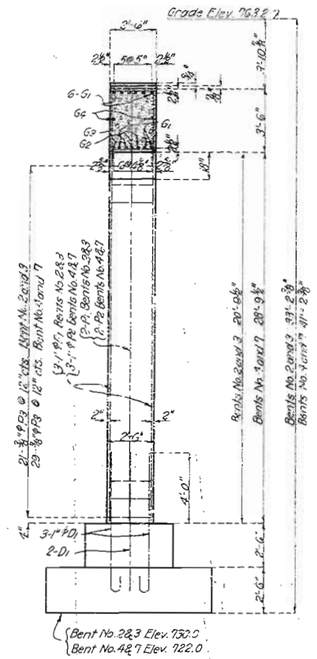

SECTION B-B

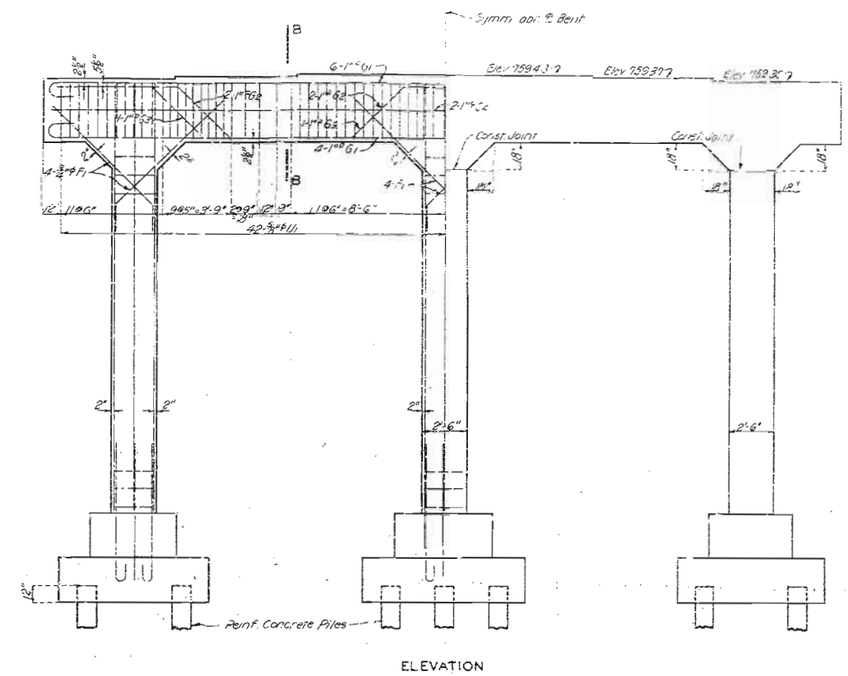

ELEVATION

Note:- Top of bents and piers to be finished as nearly as possible to within 1/8" of final elev. of bottom of plates. Plates to be seated to proper elevation by inserting soft lead plates between top of bents, or piers and bottom of plate. Concrete seat under lead plates to be dressed to a uniform level bearing with carborundum brick. Cost of lead plates to be included in price bid for other items. See Special Provisions.

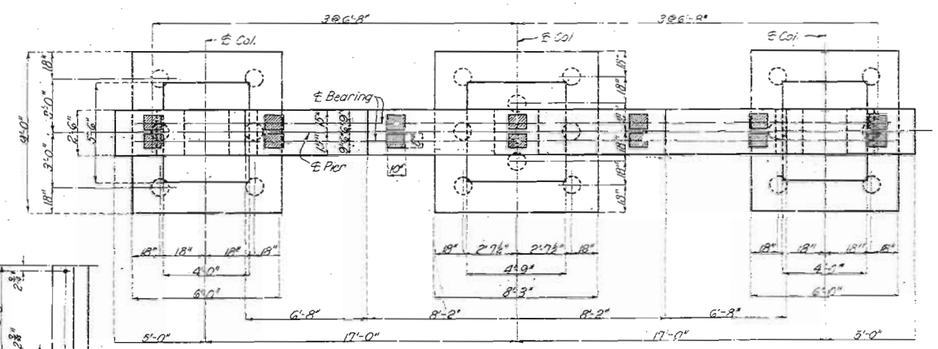

PLAN

DETAILS OF BENTS NO. 2, 3, 4 & 7

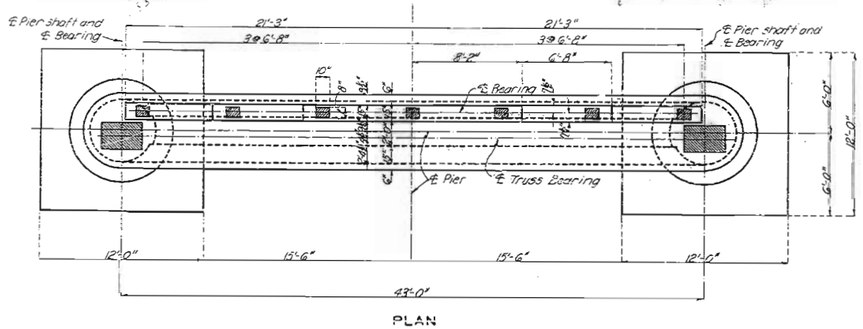

PLAN

DETAILS OF PIERS NO. 5 & 6

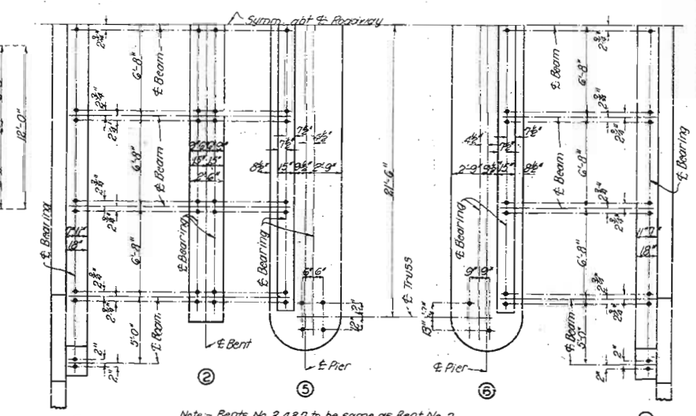

Note:- Bents No. 3, 4 & 7 to be same as Bent No. 2

HALF ANCHOR BOLT PLAN

Note:- This drawing is not to scale, follow dimensions.

BRIDGE OVER BLUE RIVER

STATE ROAD FROM KANSAS CITY EAST

ABOUT 2.25 MILES S.W. OF CENTROPOLIS QUARRY

PROJ. NO. N.R.M. 352A (U.S. 40 A P.) STA 37+25

JACKSON COUNTY

SUBMITTED BY W. R. Sachs BRIDGE ENGINEER DATE 3/18/32

APPROVED BY T. H. Cutler CHIEF ENGINEER DATE 3/18/32

Designed Oct. 1931 By H.H.M.
Drawn Oct. 1931 By H.H.M.
Traced Oct. 1931 By H.E.C.
Checked Nov. 1931 By F.W.H.

Sheet No. 3 of 6

S-918 R

J-526

F. A.

MISSOURI STATE HIGHWAY DEPARTMENT

FED. ROAD DIST. NO.	STATE	FED. PROJ. NO.	FISCAL YEAR	SHEET NO.	TOTAL SHEETS
5	MO	N.H.S.D.P. 352 A (U.S. 40 A.P.)	19		

Note:- All loads and stresses are given in kips. All moments are given in foot kips and are maximum moments about upper and lower kern points. Length of hangers given are centered lengths.

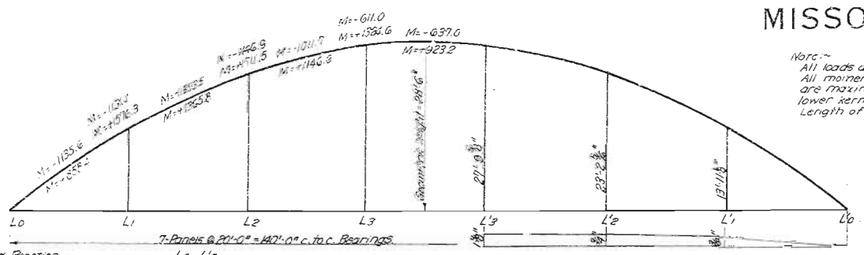

Camber Blocking Diagram

End Reaction	L0 - L'0
D.L. = 297.1	D.L. = 251.0
L.L. = 155.6	L.L. = 156.0
I. = 24.1	I. = 23.9
476.8	530.9

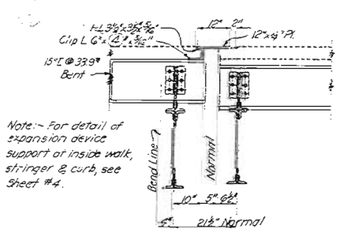

Note:- For detail of expansion device support at inside walk, stringer & curb, see Sheet #4.

SECTION C-C

Through End Bracket (Expansion End of Arch)

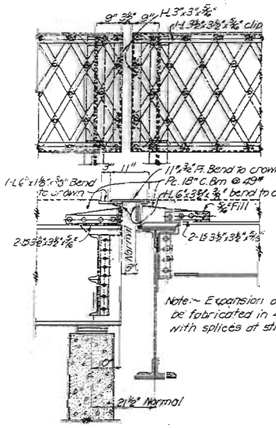

Note:- Expansion device to be fabricated in 4 sections, with splices at stringers.

SECTION A-A

Through End Floor Beam (Expansion End of Arch)

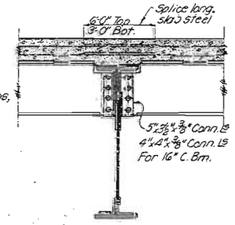

SECTION A-A

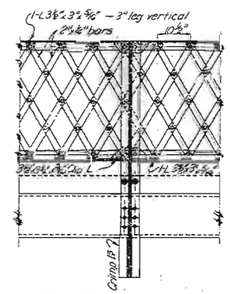

PART ELEVATION OF RAIL

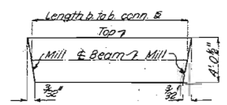

FLOOR BEAM MILLING DIAGRAM

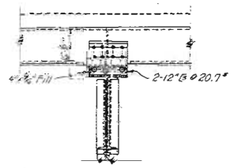

SECTION B-B

For details of sway see Sheet No. 6.

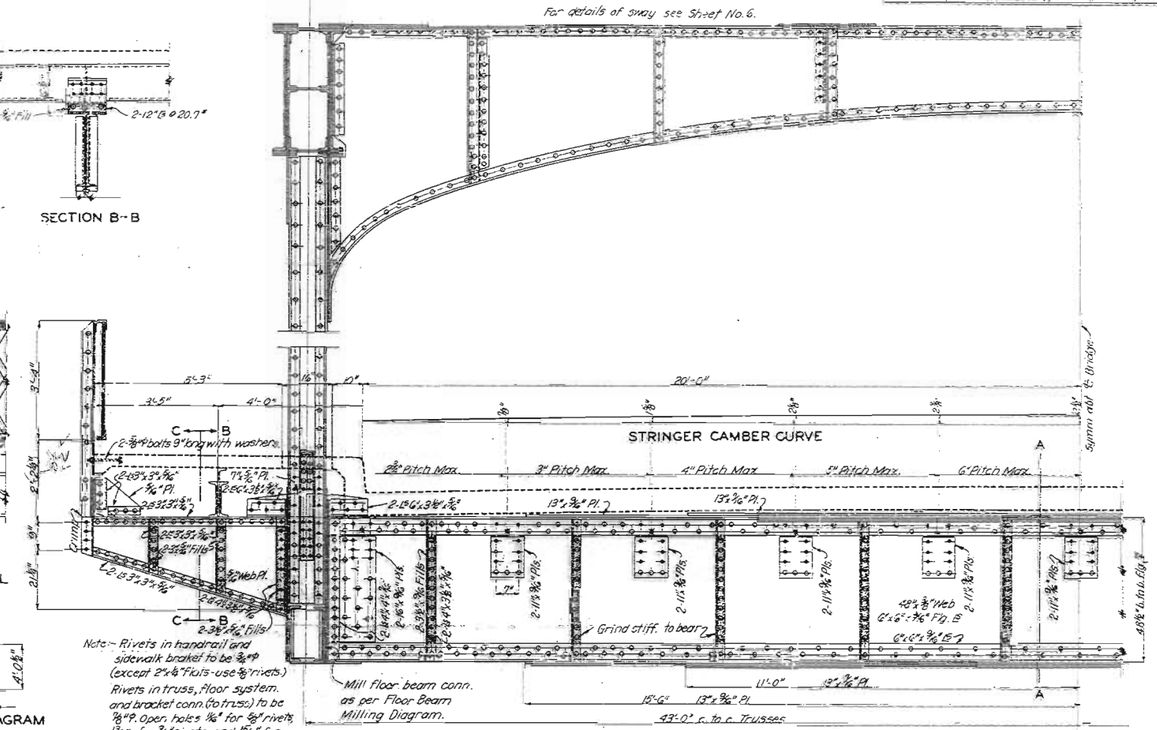
5'-3"
3'-5"
4'-0"
20'-0"
C
B
2-⅝"φ bolts 9" long with washers
12"x⅜" Pl.
2-L 6"x3½"x⅜"
2-L 3½"x3½"x⅜"
⅜" Fill
Grind
Web Pl.
2-L 3½"x3½"x⅜"
2-L 3"x3"x⅜"
2-L 3½"x3½"x⅜"
2-L 3½"x3½"x⅜"
2-L 3½"x3½

MISSOURI STATE HIGHWAY DEPARTMENT

FED. ROAD DIST. NO	STATE	FED. AID PROJ. NO.	FISCAL YEAR	SHEET NO.	TOTAL SHEETS
5	MO.	N.R.M. 352 A (U.S.40A.P.)	19		

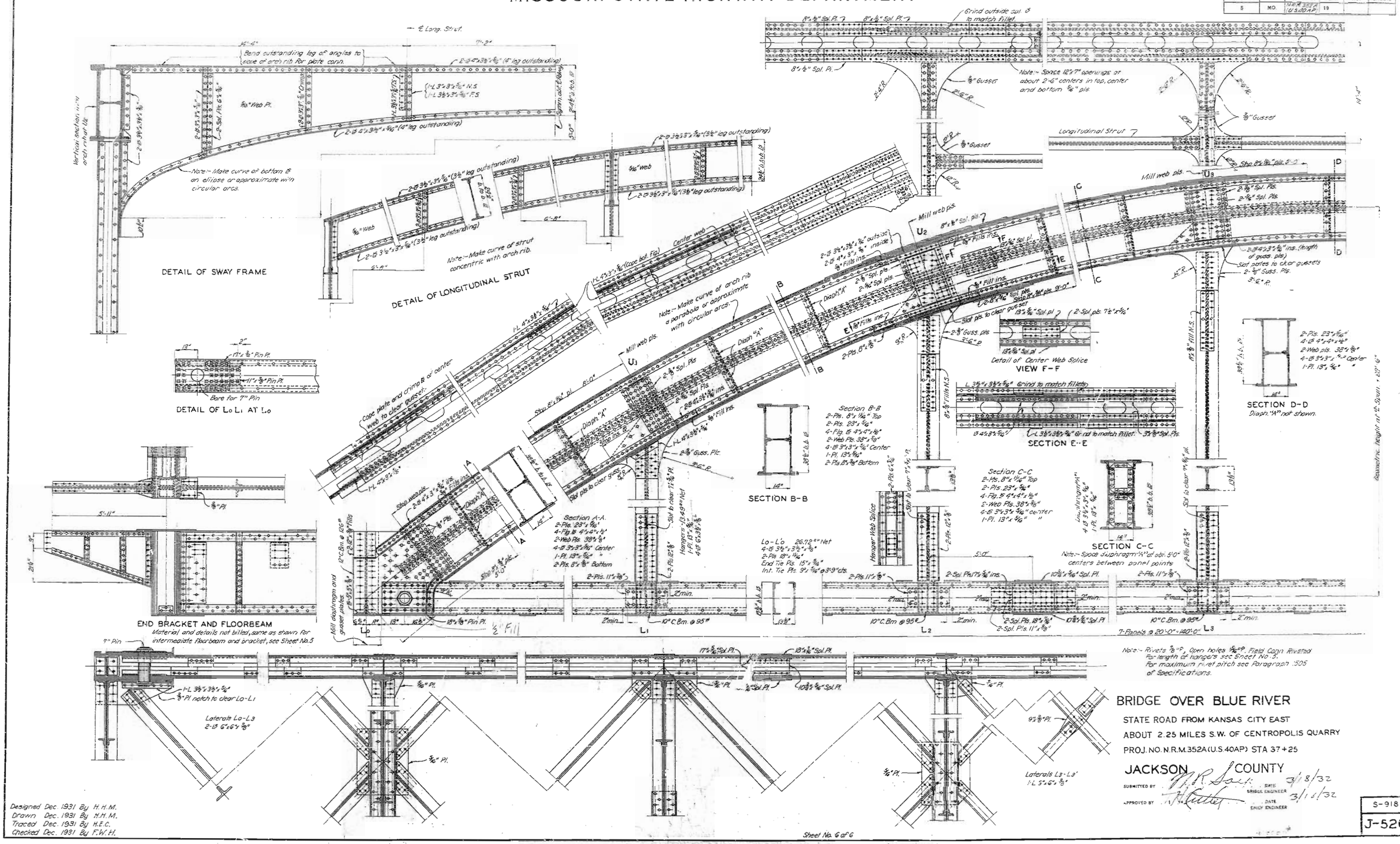

BRIDGE OVER BLUE RIVER

STATE ROAD FROM KANSAS CITY EAST

ABOUT 2.25 MILES S.W. OF CENTROPOLIS QUARRY

PROJ. NO. N.R.M.352A(U.S.40AP) STA 37+25

JACKSON COUNTY

SUBMITTED BY O.R. Sauk DATE 3/18/32 BRIDGE ENGINEER

APPROVED BY H. Kutter DATE 3/16/32 ENGR. ENGINEER

Designed Dec. 1931 By H.H.M.
Drawn Dec. 1931 By H.H.M.
Traced Dec. 1931 By H.E.C.
Checked Dec. 1931 By F.W.H.

Sheet No. 6 of 6

S-918 R

J-526

F. A.

MISSOURI HIGHWAY AND TRANSPORTATION COMMISSION

STATE	PROJ. NO.	SHEET NO.
MO.	F.A.-3334 (410)	11
SEC./SUR. 13	TWP. 49N	RGE. 33W

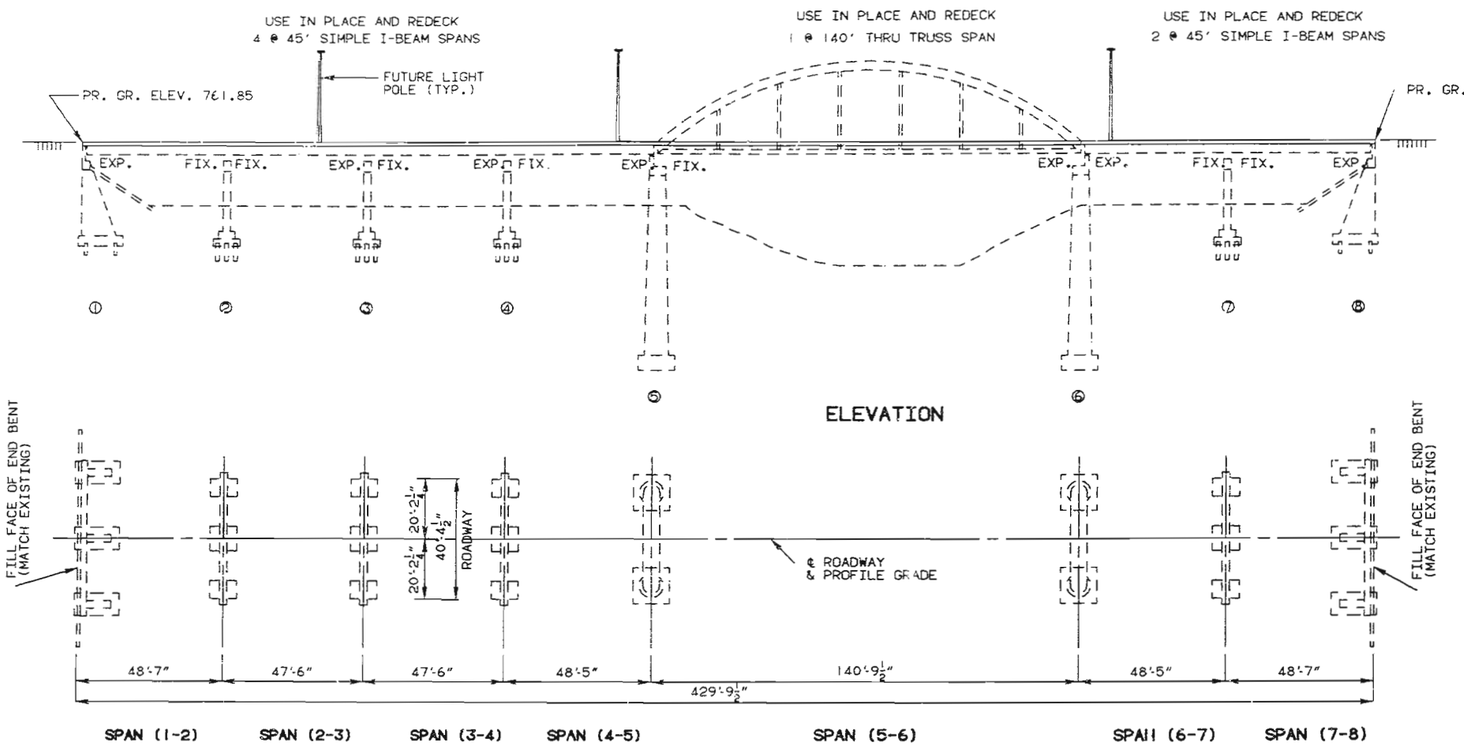

GENERAL NOTES:

DESIGN SPECIFICATIONS: A.A.S.H.T.O.-1989 LOAD FACTOR DESIGN

DESIGN LOADING
HS20-44 NO FUTURE WEARING SURFACE
MODIFIED 24,000# TANDEM AXLE

DESIGN UNIT STRESSES:

CLASS B CONCRETE (SUBSTRUCTURE) F'C=3,000 PSI

CLASS B1 CONCRETE (SUPERSTRUCTURE) F'C=4,000 PSI

CLASS B2 CONCRETE (SUPERSTRUCTURE) F'C=4,000 PSI
STRUCTURAL CARBON STEEL FS=20,000 PSI
REINFORCING STEEL (GRADE 60) FY=60,000 PSI

FIELD CONNECTIONS: FIELD CONNECTIONS, HIGH STRENGTH BOLTS 3/4"Ø, HOLES 13/16"Ø, EXCEPT AS NOTED.

JOINT FILLER: ALL JOINT FILLER SHALL MEET THE REQUIREMENTS OF STD. SPEC. 1057.2.4, EXCEPT AS NOTED.

REINFORCING STEEL: MINIMUM CLEARANCE TO REINFORCING STEEL SHALL BE 1 1/2", UNLESS OTHERWISE SHOWN.

TRAFFIC MAINTAINED: TRAFFIC OVER STRUCTURE TO BE MAINTAINED DURING CONSTRUCTION.

STEEL GRID SYSTEM: STEEL GRID FLOOR (HALF CONCRETE FILLED) (SEE SPECIAL PROVISIONS).

EXISTING WORK: OUTLINE OF OLD WORK IS INDICATED BY LIGHT DASHED LINES. HEAVY LINES INDICATE NEW WORK.

BARS BONDED IN OLD CONCRETE NOT REMOVED SHALL BE CLEANLY STRIPPED AND EMBEDDED INTO NEW CONCRETE WHERE POSSIBLE. IF LENGTH IS AVAILABLE, OLD BARS SHALL EXTEND INTO NEW CONCRETE AT LEAST 40 DIAMETERS FOR SMOOTH BARS AND 30 DIAMETERS FOR DEFORMED BARS, UNLESS OTHERWISE NOTED.

ROADWAY SURFACING ADJACENT TO BRIDGE ENDS TO MATCH NEW CONCRETE DECK (ROADWAY ITEM).

CONTRACTOR SHALL VERIFY ALL DIMENSIONS IN FIELD BEFORE ORDERING NEW STEEL.

ESTIMATED QUANTITIES

ITEM		SUBSTR.	SUPERSTR.	TOTAL
SPECIAL WORK (BRIDGES)	LUMP SUM			1
REMOVAL OF EXISTING BRIDGE DECK	SQ. FT.		23567	23567
(66 IN.) PEDESTRIAN FENCE (STRUCTURES)	LIN. FT.		856	856
CLASS B CONCRETE (SUBSTR)	CU. YD.	17.1		17.1
SUBSTRUCTURE REPAIR (UNFORMED)	SQ. FT.	500		500
SLAB ON STEEL	SQ. YD.		1362	1362
SIDEWALK (BRIDGES)	SQ. FT.		5449	5449
POLYMER CONCRETE OVERLAY	SQ. YD.		634	634
PREFORMED COMP. EXP. JT. SEAL (5.0")	LIN. FT.		41	41
REINFORCING STEEL (BRIDGES)	POUND	2140		2140
CONDUIT SYSTEM ON STRUCTURE	LUMP SUM			1
FABRICATED STRUCTURAL CARBON STEEL (I-BEAM)	POUND		22060	22060
STEEL GRID FLOOR (HALF CONCRETE FILLED)	SQ. FT.		5904	5904
SLAB DRAINS	EACH		64	64
BRIDGE GUARD RAIL (THRIE BEAM)	LIN. FT.		850	850

ESTIMATED QUANTITIES FOR C.I.P. SLAB

TYPE OF SLAB	REINF. (LBS.) EPOXY	REINF. (LBS.) PLAIN	CONC. (CU. YDS.)
CAST-IN-PLACE CONVENTIONAL FORMS	82790		340.0

NOTE: THE TABLE OF ESTIMATED QUANTITIES FOR C.I.P. SLAB REPRESENTS THE QUANTITIES USED BY THE STATE IN PREPARING THE COST ESTIMATE FOR CONCRETE SLAB ON STEEL IN I-BEAM SPANS. VARIATIONS MAY BE ENCOUNTERED IN THESE ESTIMATED QUANTITIES, BUT THESE VARIATION CANNOT BE USED FOR AN ADJUSTMENT IN THE CONTRACT UNIT PRICE PER SQUARE YARD OF C.I.P. SLAB USED.

HYDROLOGIC DATA

DRAINAGE AREA	= 230	(SQ. MILES)	
DESIGN DISCHARGE	56,000 = CFS	(100	YEARS)
DESIGN HIGH WATER ELEVATION	=764.6	(100	YEARS)
ESTIMATED BACKWATER	= NEGLIGIBLE		

REPAIRS TO BRIDGE OVER BLUE RIVER

STATE ROAD FROM RT. I-70 TO MANCHESTER TRAFFICWAY
IN KANSAS CITY

PROJECT NO. F.A.-3334 (410) STA. 37+25.0±
JOB NO. 4U 751-40 RTE. 40
JACKSON COUNTY

DATE: 3/6/91

STD. 606.23
STD. 706.35
J-526R

DESIGNED JAN. 1990
DETAILED JAN. 1990
CHECKED JAN. 1990

NOTE: THIS DRAWING IS NOT TO SCALE. FOLLOW DIMENSIONS.

SEE FINAL PLANS

SHEET NO. 1 OF 18

76 327

STATE	PROJ. NO.	SHEET NO.
MO.		

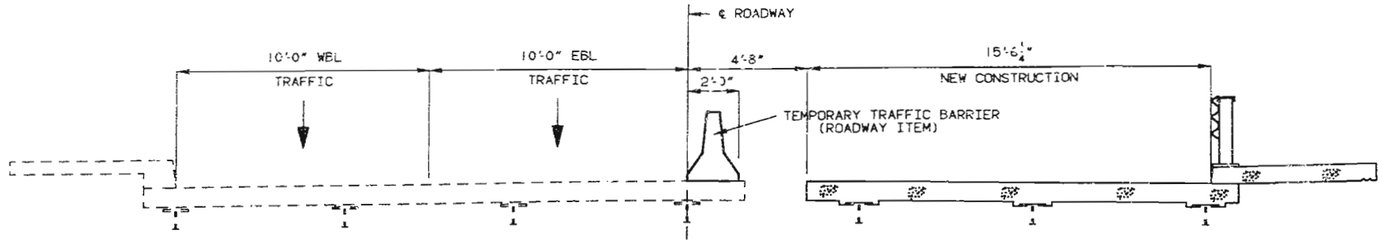

STAGE 1 CONSTRUCTION

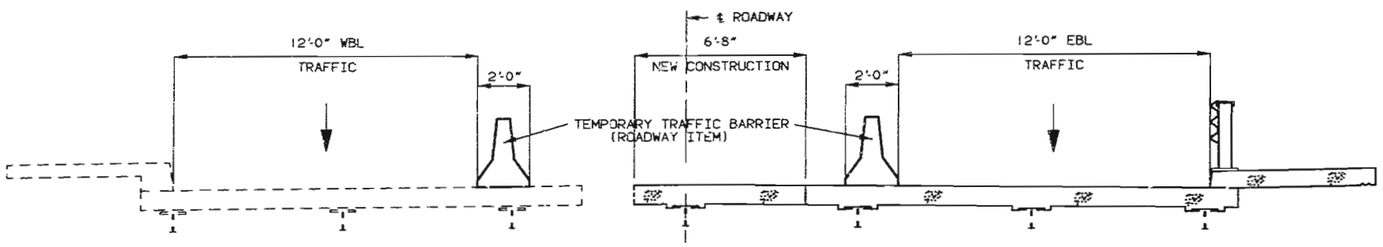

STAGE 2 CONSTRUCTION

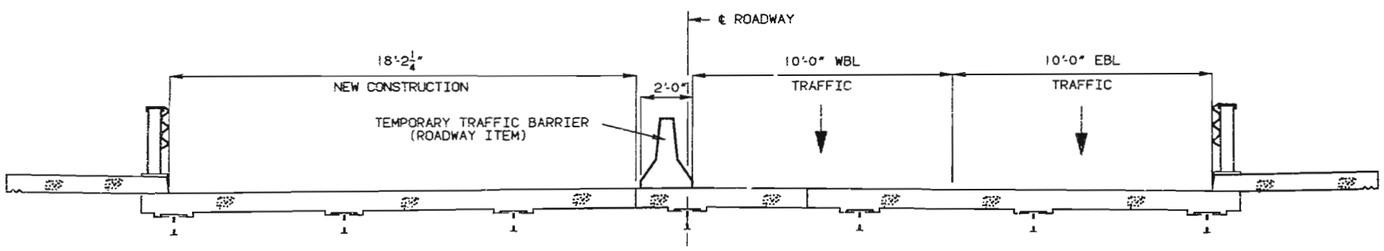

STAGE 3 CONSTRUCTION

STAGE CONSTRUCTION - I- BEAM SPANS

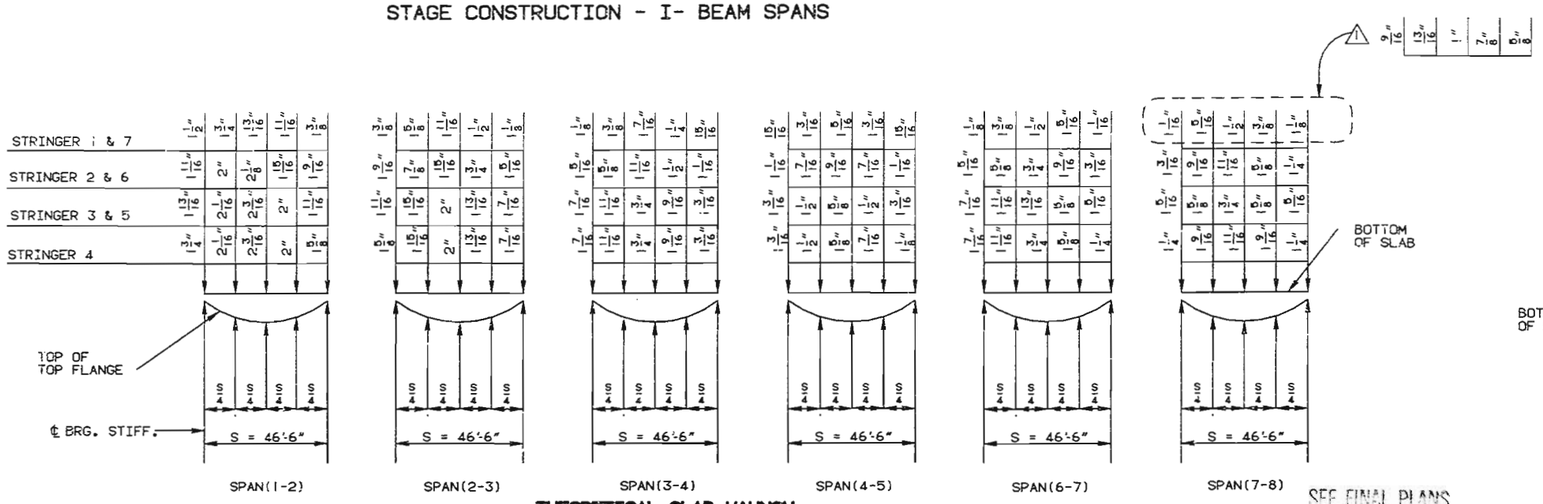

THEORETICAL SLAB HAUNCH

NOTE: THIS DRAWING IS NOT TO SCALE. FOLLOW DIMENSIONS.

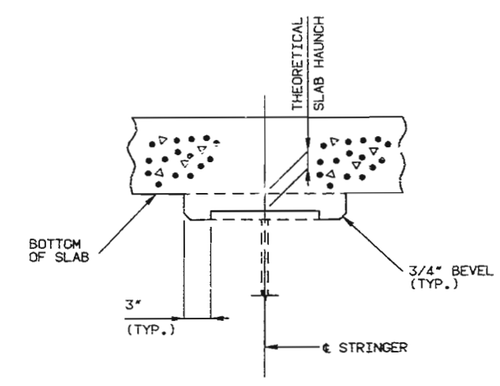

DETAIL OF SLAB HAUNCH

DETAILED JAN. 1990
CHECKED JAN. 1990

SEE FINAL PLANS

SHEET NO. 2 OF 18

⚠ REVISED 7-17-91

JACKSON COUNTY

J-526R

328

STATE	PROJ. NO.	SHEET NO.
MO.		13

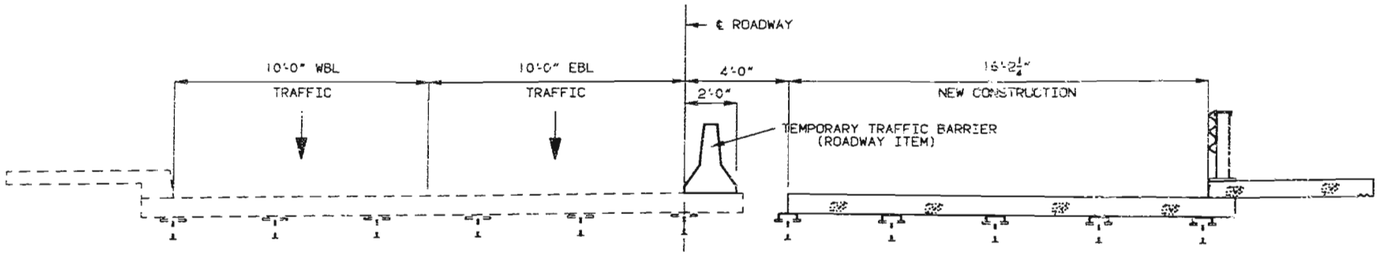

STAGE 1 CONSTRUCTION

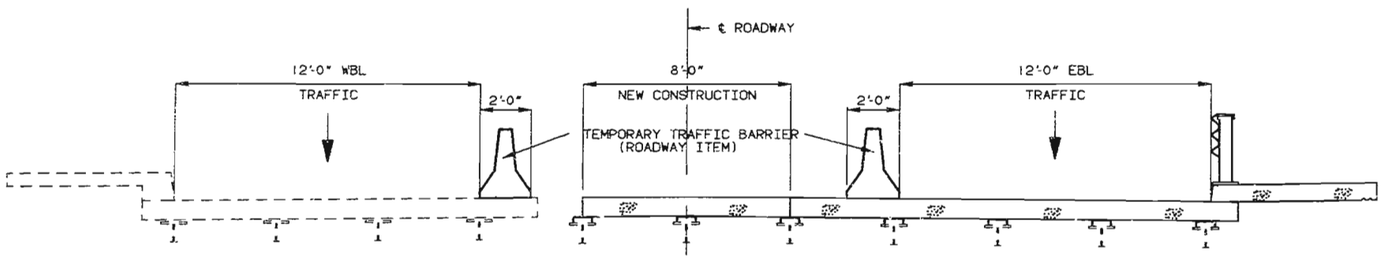

STAGE 2 CONSTRUCTION

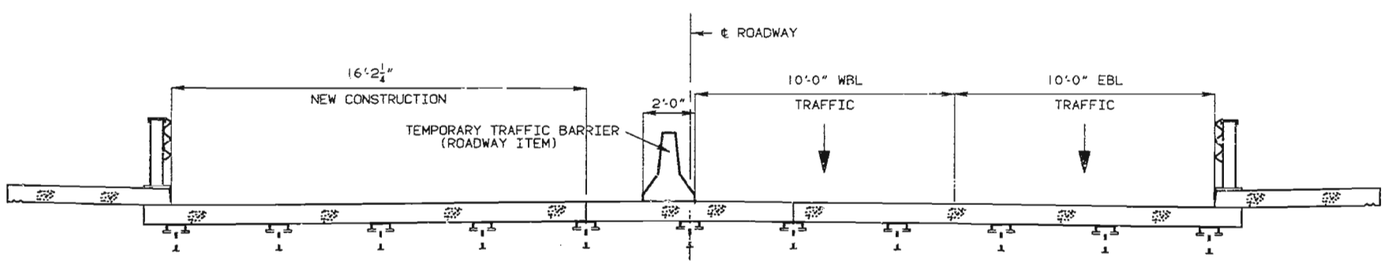

STAGE 3 CONSTRUCTION

STAGE CONSTRUCTION -TRUSS SPAN

178 329

DETAILED JAN. 1990
CHECKED JAN. 1990

NOTE: THIS DRAWING IS NOT TO SCALE. FOLLOW DIMENSIONS.

JACKSON COUNTY J-526R

STATE	PROJ. NO.	SHEET NO.
MO.		14

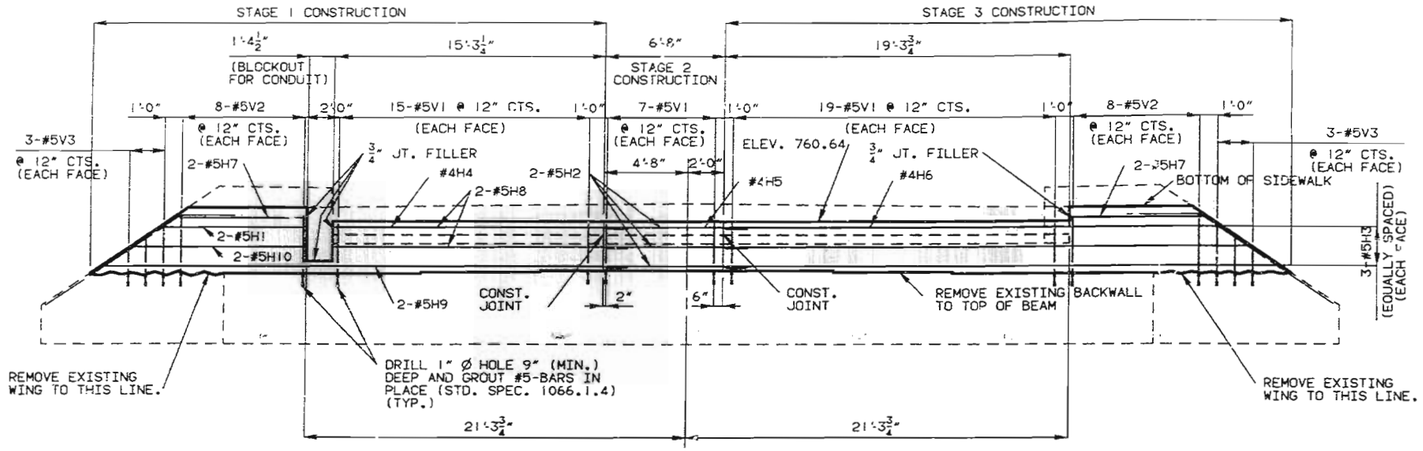

ELEVATION

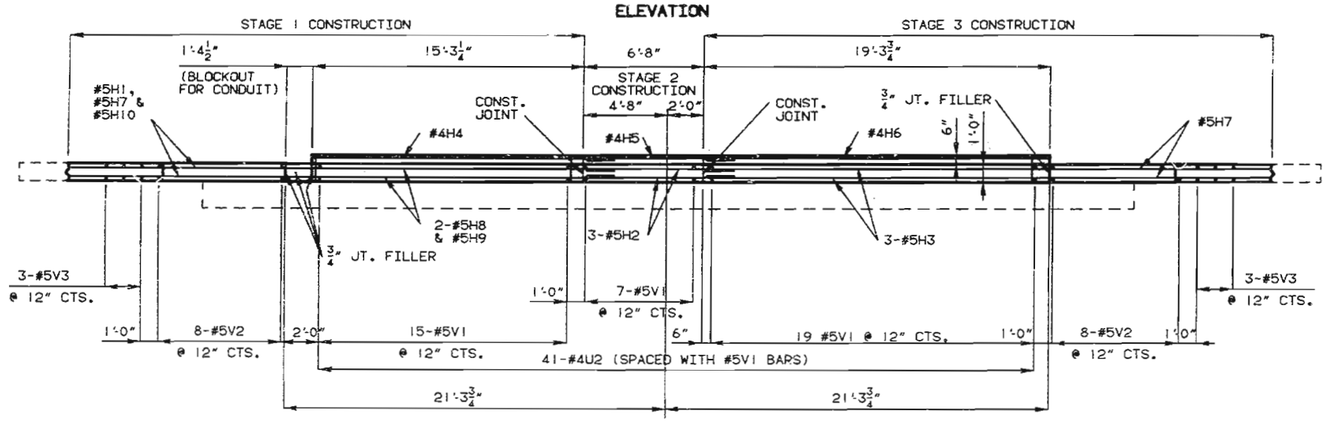

PLAN

MODIFICATIONS TO END BENT NO. 1

(BENT NO. 8 SIMILAR)

NOTE: FOR BLOCKOUT FOR CONDUIT SEE SHT. 17.

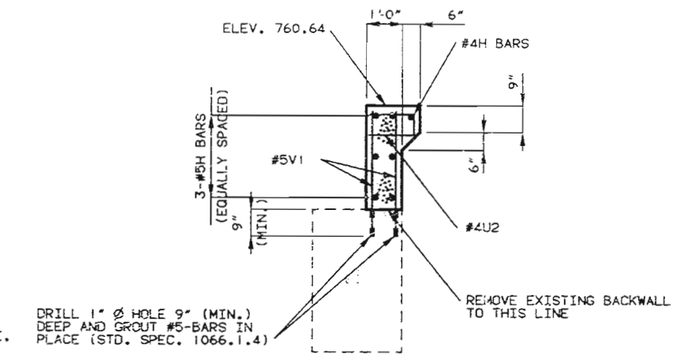

SECTION THRU BACKWALL

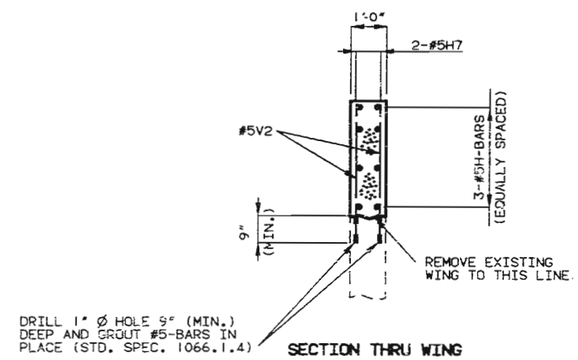

SECTION THRU WING

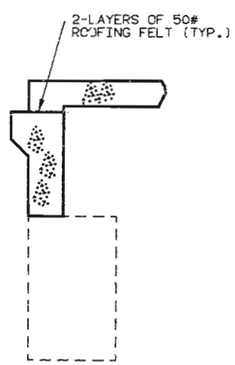

SECTION B-B

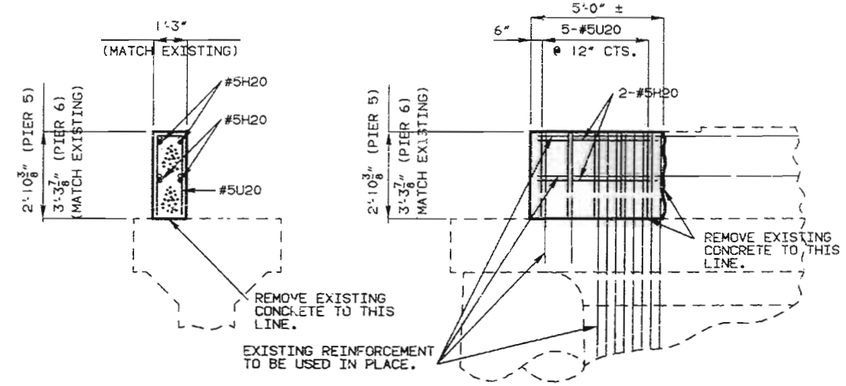

REPAIR TO PIER NO. 5

(PIER NO. 6 SIMILAR)

NOTE: REPAIRS SHOWN ARE AT NORTH END OF PIER NO. 5 AND SOUTH END OF PIER NO. 6.

DETAILED JAN. 1990
CHECKED JAN. 1990

NOTE: THIS DRAWING IS NOT TO SCALE. FOLLOW DIMENSIONS.

JACKSON COUNTY J-526R

179 330

STATE	PROJ. NO.	SHEET NO.
MO.		15

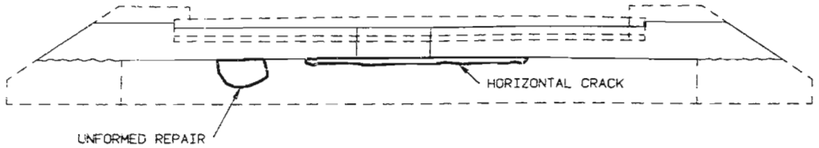

ELEVATION END BENT NO. 1

NOTE: SEE SHEET NO.4 FOR MODIFICATIONS ABOVE BEARING BEAM.

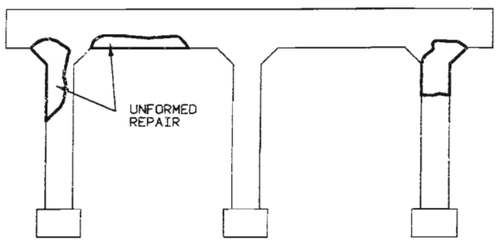

ELEVATION BENT NO. 2

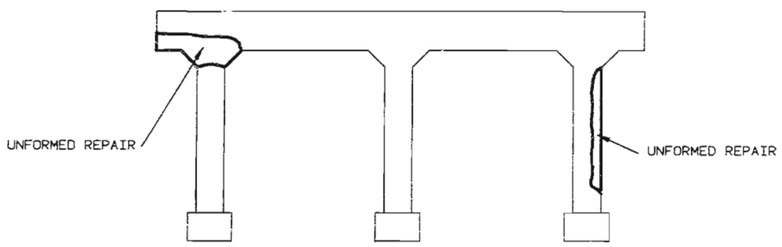

ELEVATION BENT NO. 3

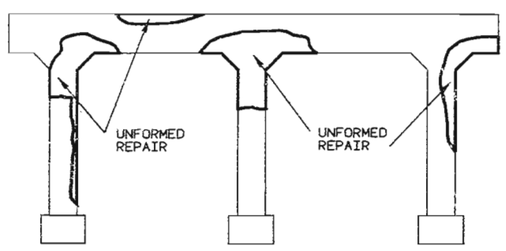

ELEVATION BENT NO. 4

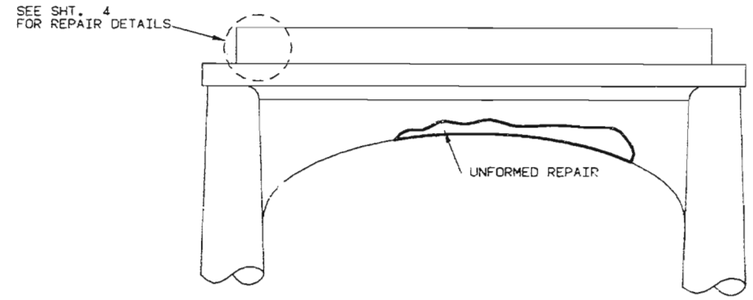

ELEVATION PIER NO. 5

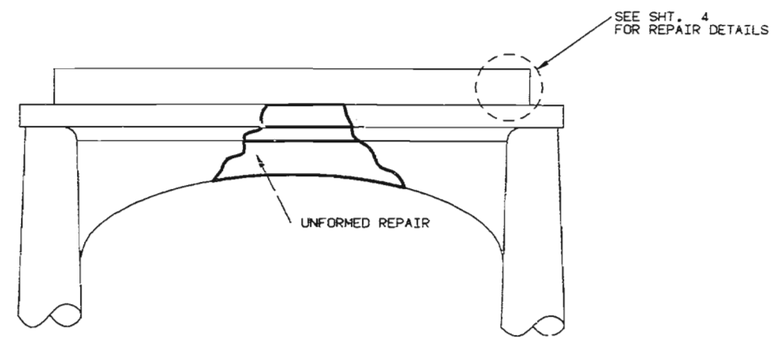

ELEVATION PIER NO. 6

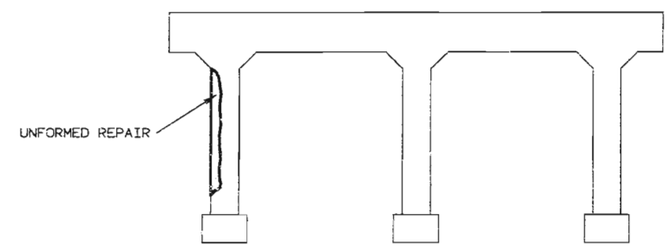

ELEVATION BENT NO. 7

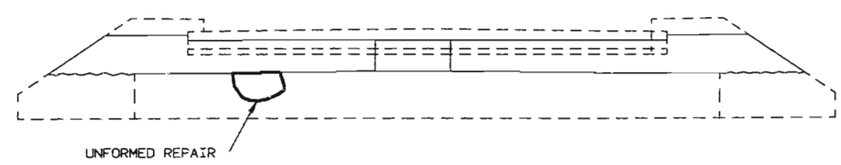

ELEVATION END BENT NO. 8

NOTE: SEE SHEET NO.4 FOR MODIFICATIONS ABOVE BEARING BEAM.

LOCATION OF UNFORMED SUBSTRUCTURE REPAIR

DETAILED JULY 1990
CHECKED JULY 1990

NOTE: THIS DRAWING IS NOT TO SCALE. FOLLOW DIMENSIONS.

JACKSON COUNTY

J-526R

180 331

STATE	PROJ. NO.	SHEET NO.
MD.		

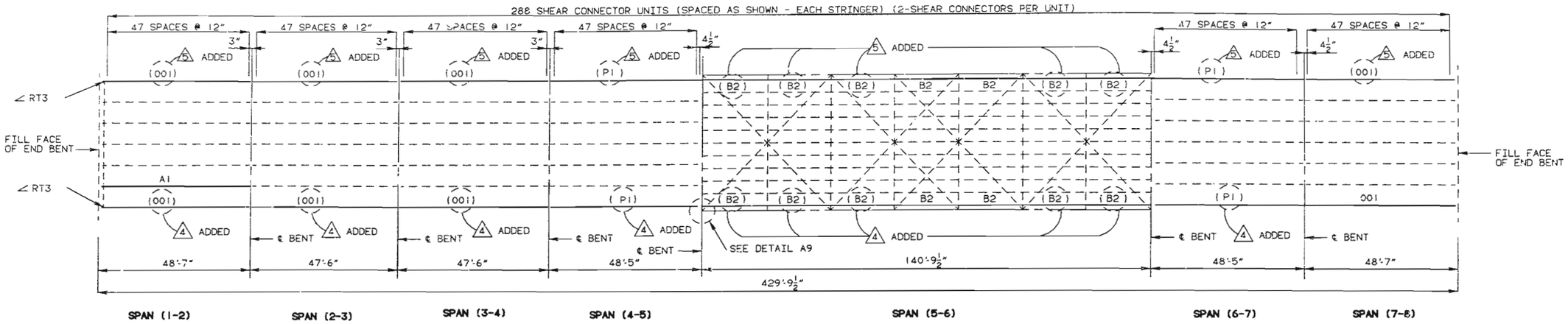

PLAN OF STRUCTURAL STEEL

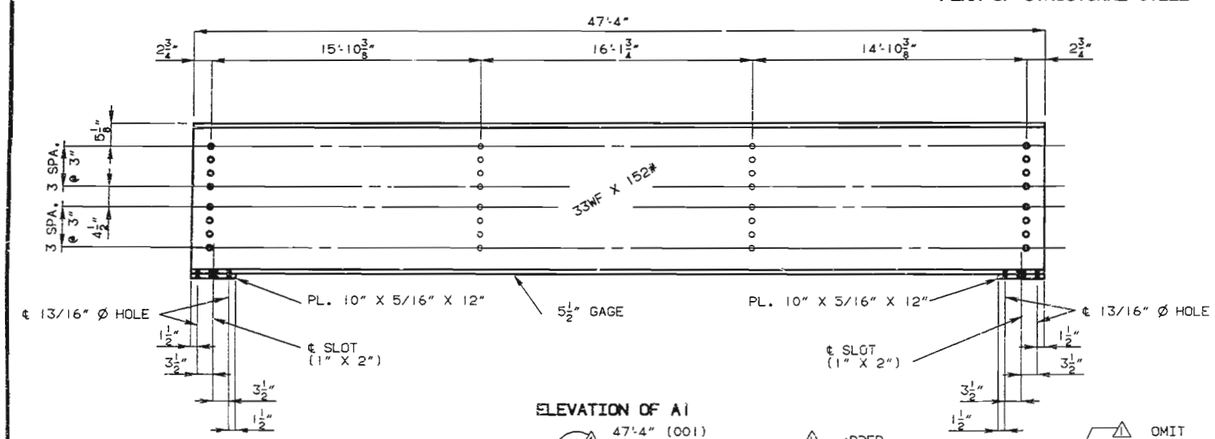

ELEVATION OF A1

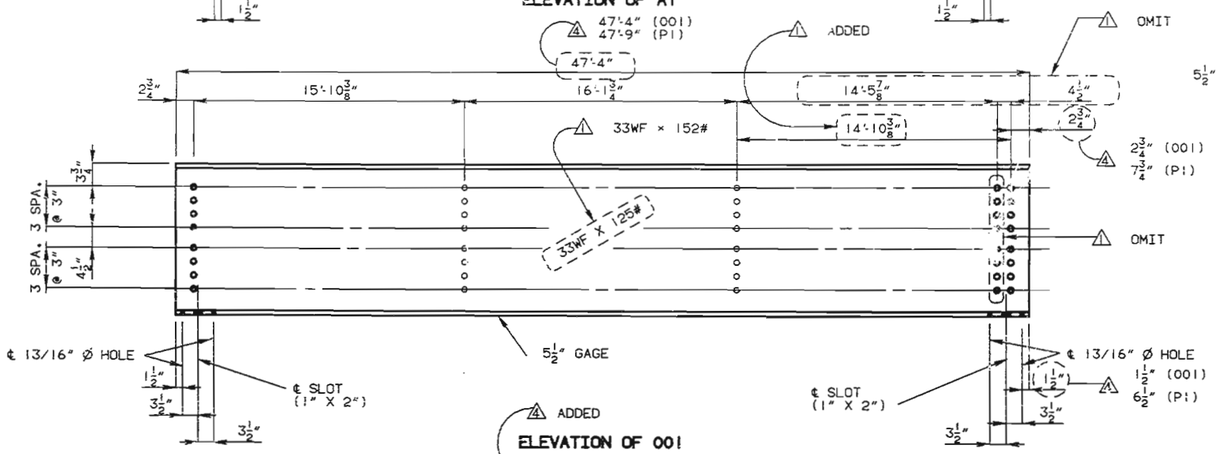

ADDED

ELEVATION OF 001

ELEVATION OF P1

NOTE: FOR DETAILS OF SHEAR CONNECTORS SEE SHT. 7 .
FOR DETAIL OF ∠A9 SEE SHT. 7 .
FOR DETAIL OF ∠RT3 SEE SHT. 7 .

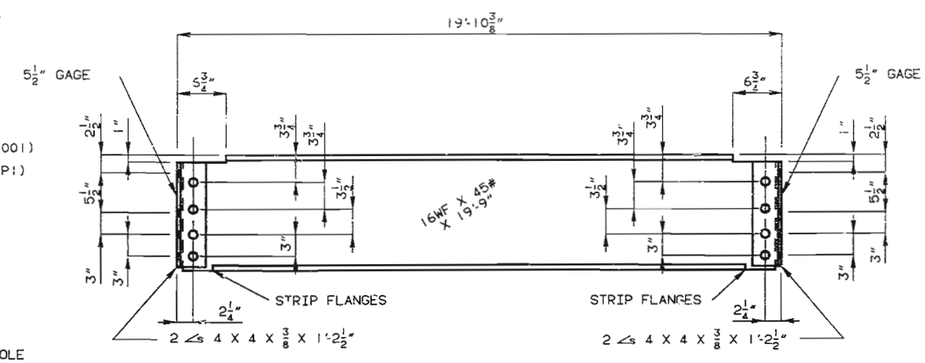

ELEVATION OF B2

NOTE: FIELD CONNECTIONS FOR B2, HIGH STRENGTH BOLTS 7/8" Ø, HOLES 15/16" Ø.

DETAILED JAN. 1990
CHECKED JAN. 1990

NOTE: THIS DRAWING IS NOT TO SCALE. FOLLOW DIMENSIONS.

...NAL PLANS

SHEET NO. 6 OF 18

5 REVISED 11-15-91
4 REVISED 9-24-91
1 REVISED 7-17-91

JACKSON COUNTY

J-526R

332

STATE	PROJ. NO.	SHEET NO.
MO.		

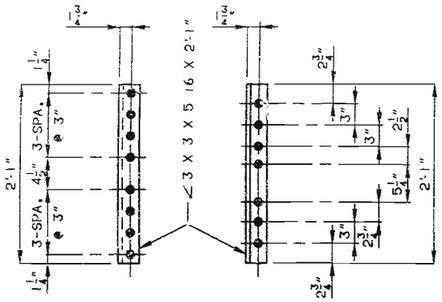

DETAIL OF ∠ RT3

1-REQUIRED AS SHOWN
1-REQUIRED OPPOSITE HAND

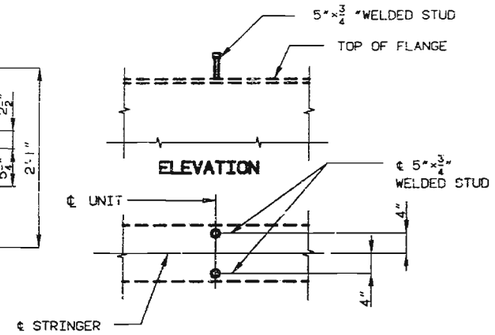

PLAN OF STUD CONN.

DETAILS OF SHEAR CONNECTORS

NOTE: WEIGHT OF 3045 LBS. OF SHEAR CONN. IS INCLUDED IN THE FABRICATED STRUCTURAL CARBON STEEL.

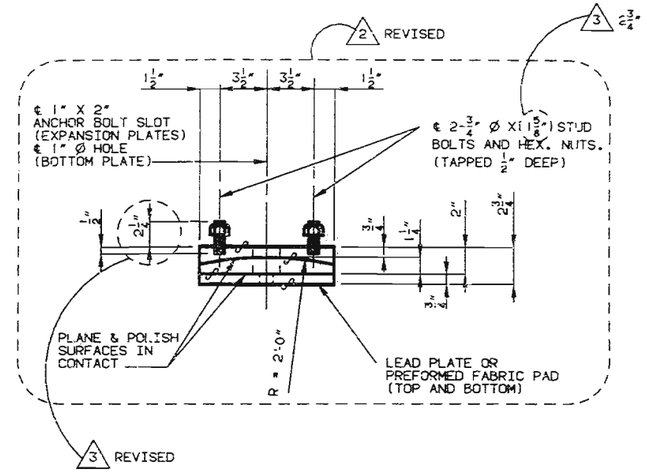

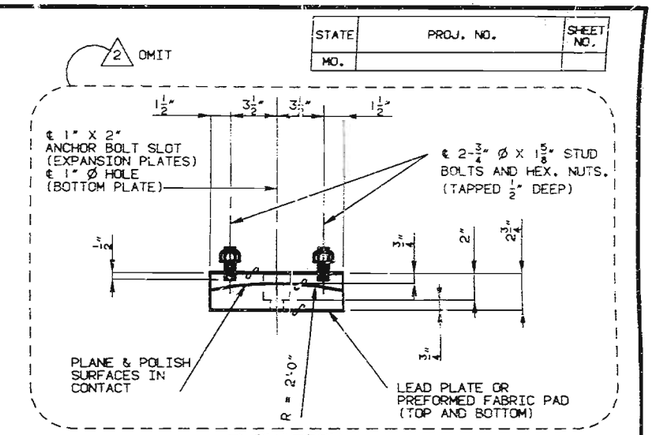

ELEVATION

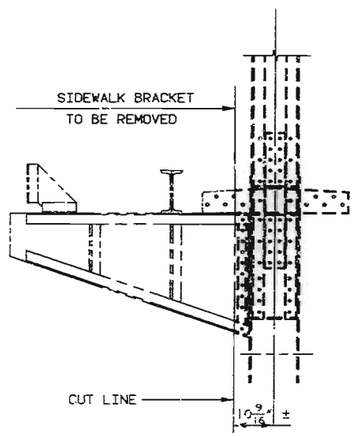

PART SECTION SHOWING BRACKET REMOVAL THRU TRUSS SPAN

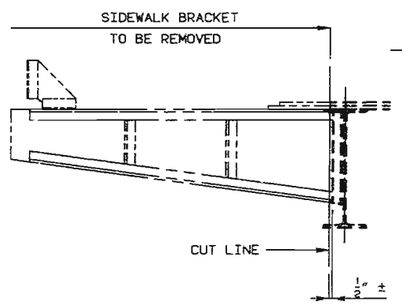

PART SECTION SHOWING BRACKET REMOVAL THRU I-BEAM SPANS

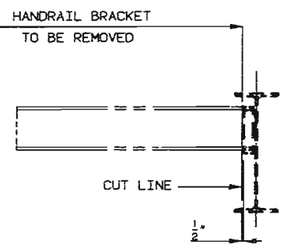

PART SECTION SHOWING BRACKET REMOVAL THRU I-BEAM SPANS

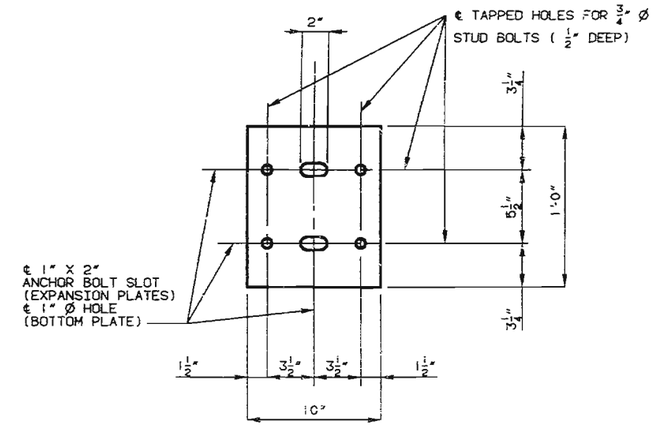

PLAN

DETAIL OF BEARING PLATE

(BT. 8 RT. STRINGER)

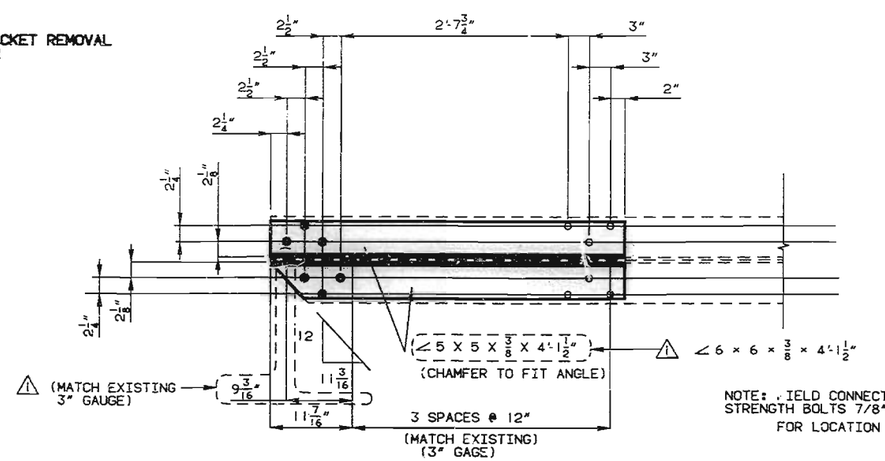

DETAIL A9

NOTE: FIELD CONNECTIONS FOR A9, HIGH STRENGTH BOLTS 7/8" Ø, HOLES 15/16" Ø.
FOR LOCATION OF A9 SEE SHT. 6 .

NOTES FOR BEARINGS:

INDICATES MACHINE FINISH SURFACE.

A LUBRICANT COATING SHALL BE APPLIED IN THE SHOP TO BOTH MATING SURFACES OF THE BEARING ASSEMBLY.

THE LUBRICANT, METHOD OF CLEANING, AND APPLICATION SHALL MEET THE REQUIREMENTS OF MIL-L-23398 AND MIL-L-46147 SUCH AS DOW CORNING'S MOLYKOTE 3402 BONDED LUBRICANT. THE COATED AREAS SHALL BE PROTECTED FOR SHIPPING AND ERECTION.

SHOP DRAWINGS ARE NOT REQUIRED FOR THE LEAD PLATES AND/OR THE PREFORMED FABRIC PADS.

3 REVISED 8-23-91
2 REVISED 8-6-91
1 REVISED 7-17-91

SEE FINAL PLANS

DETAILED JAN. 1990
CHECKED JAN. 1990

NOTE: THIS DRAWING IS NOT TO SCALE. FOLLOW DIMENSIONS.

JACKSON COUNTY J-526R

333

STATE	PROJ. NO.	SHEET NO.
MO.		12

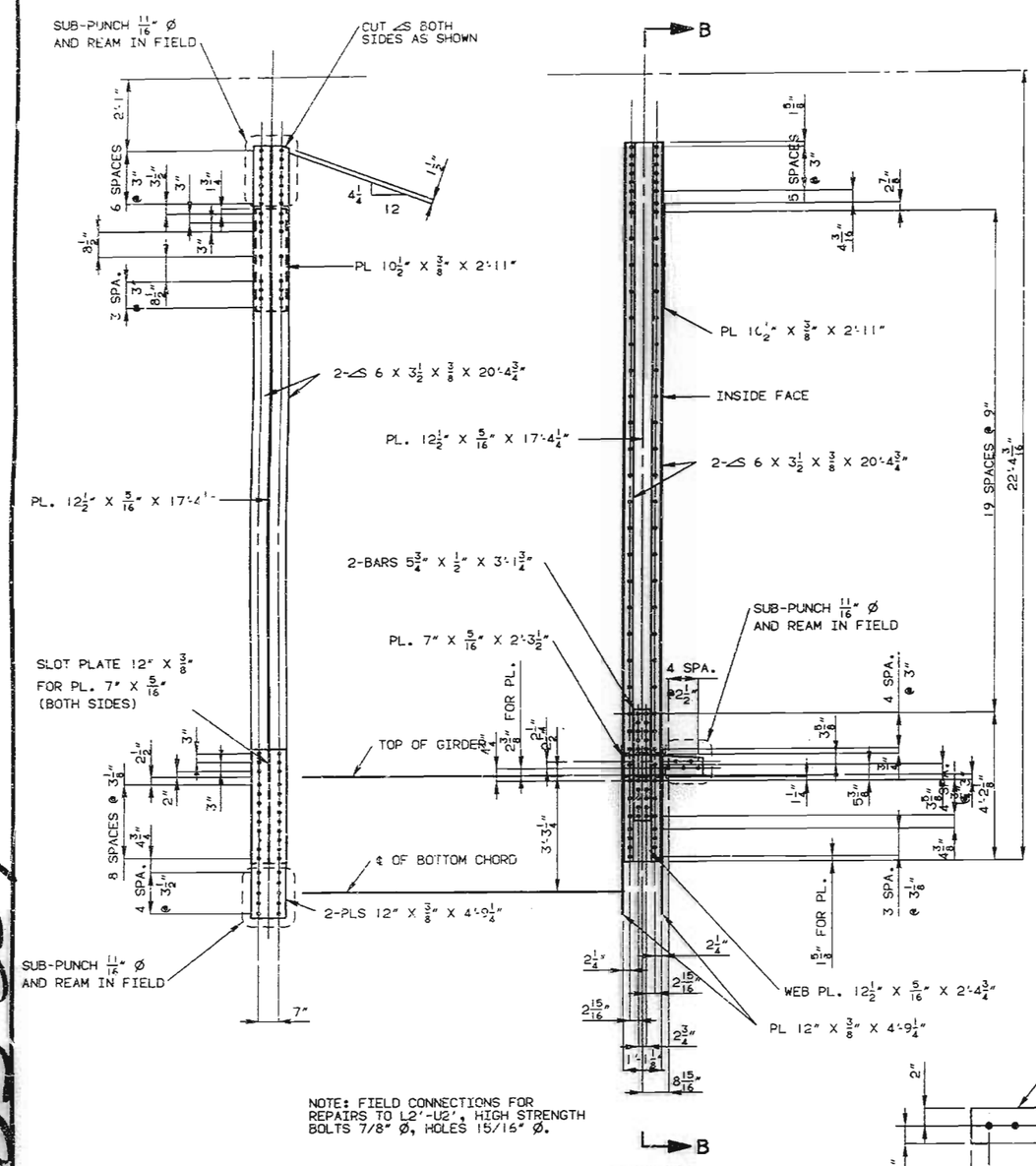

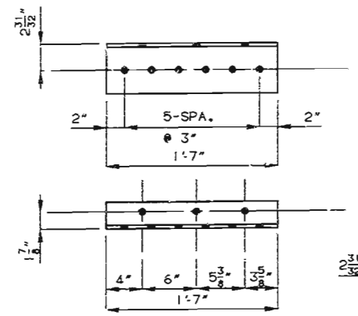

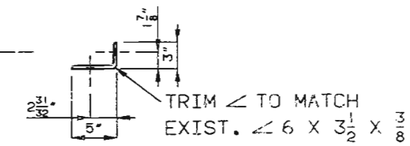

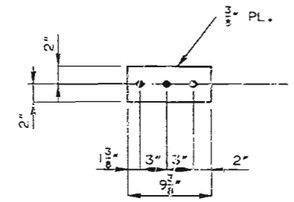

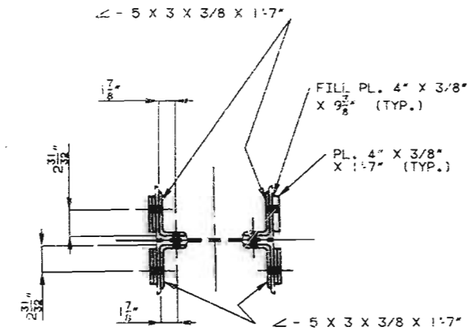

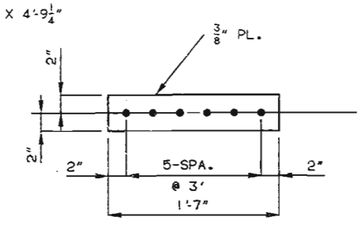

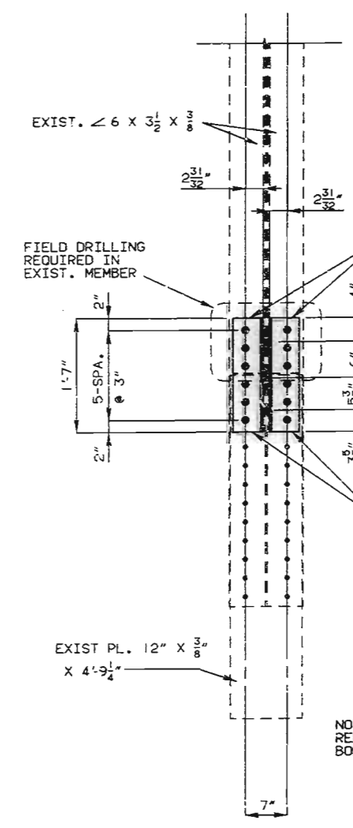

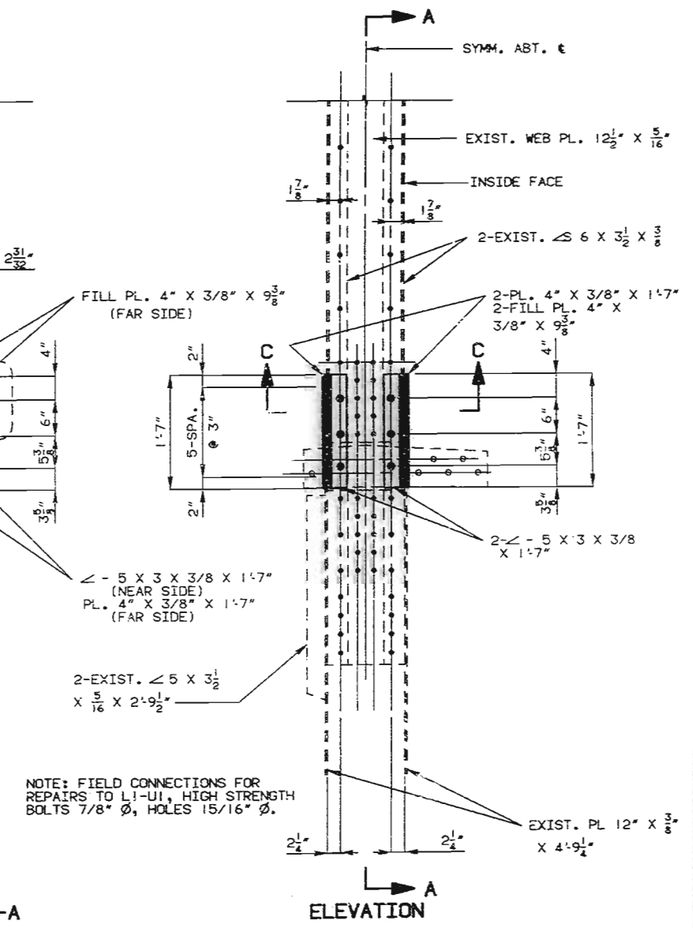

REPLACEMENT DETAILS OF L2'-U2'

(RIGHT SIDE)

REPAIRS TO L1-U1

(RIGHT SIDE)

DETAILED JULY 1990
CHECKED JULY 1990

NOTE: THIS DRAWING IS NOT TO SCALE. FOLLOW DIMENSIONS.

SHEET NO. 8 OF 18

JACKSON COUNTY J-526R

183 334

STATE	PROJ. NO.	SHEET NO.
MO.		19

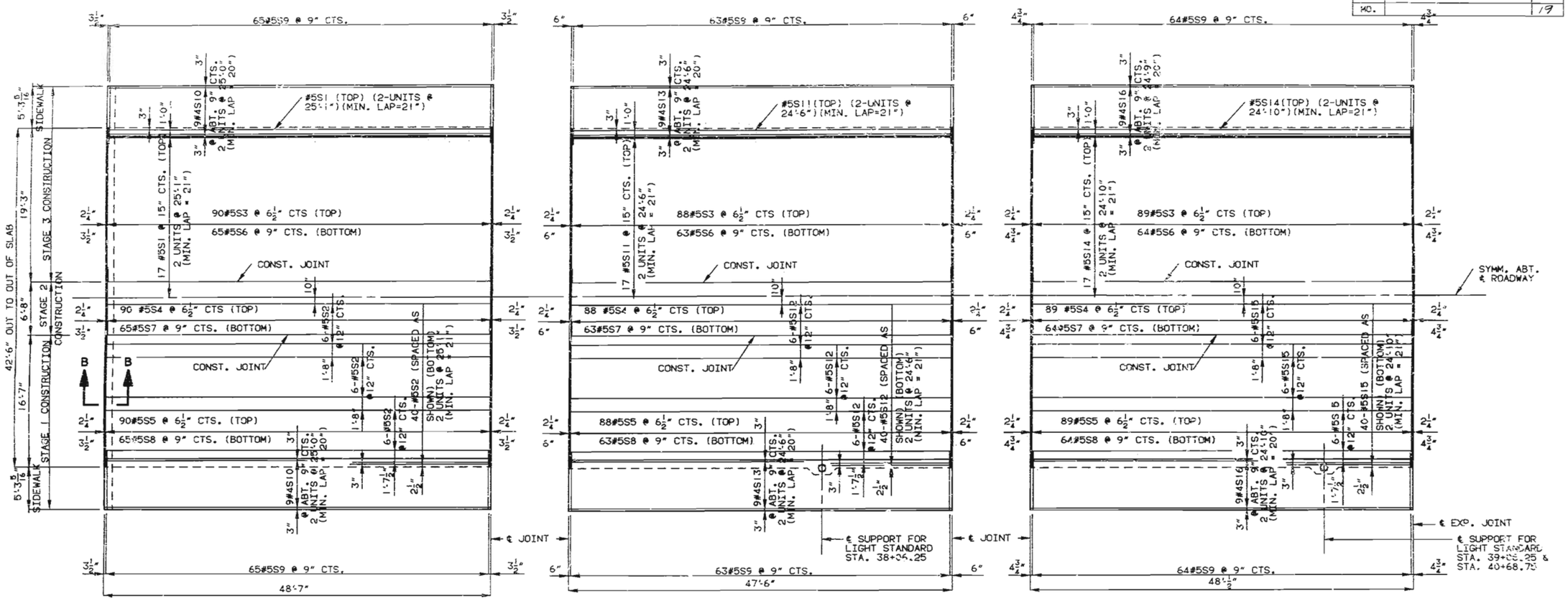

SPAN (1-2)(8-7) SPAN (2-3) (3-4) SPAN (4-5) (7-6)

NOTE: LONGITUDINAL DIMENSIONS ARE HORIZONTAL.
FOR THEORETICAL SLAB HAUNCHING DIAGRAM SEE SHT. 2 .
THE CONTRACTOR SHALL POUR AND SATISFACTORILY FINISH THE ROADWAY SLAB AT RATE OF NOT LESS THAN 25 CUBIC YARDS PER HOUR.

PART PLAN OF SLAB SHOWING REINFORCEMENT

NOTE: FOR DETAILS OF EXPANSION DEVICE AT BENT 6 SEE SHT. 16.
FOR DETAIL OF ROADWAY CROWN SEE SHT. 11.
FOR SECTION B-B SEE SHEET NO.4.

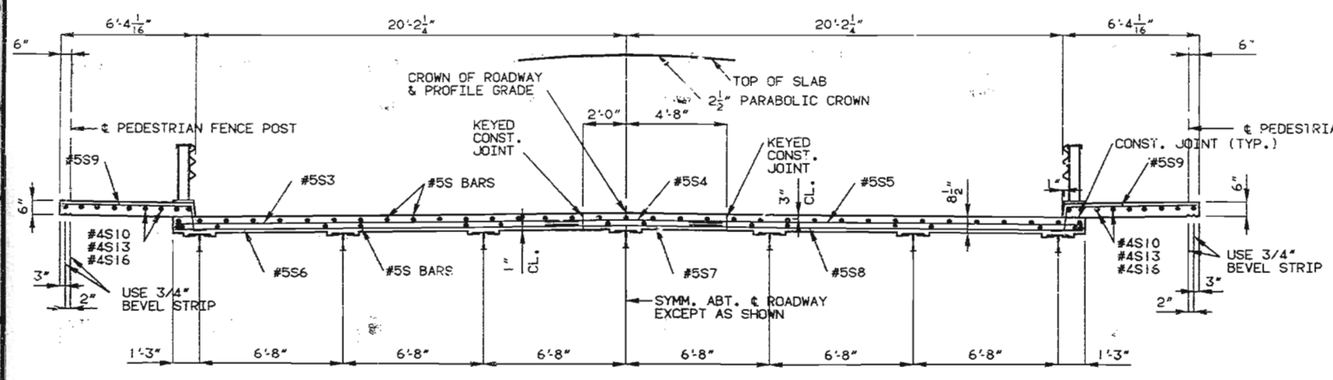

PART SECTION THRU SLAB

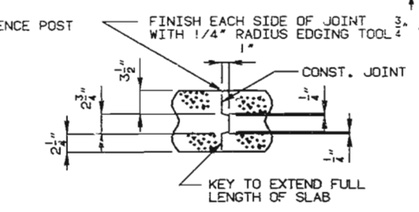

SECTION THRU JOINT

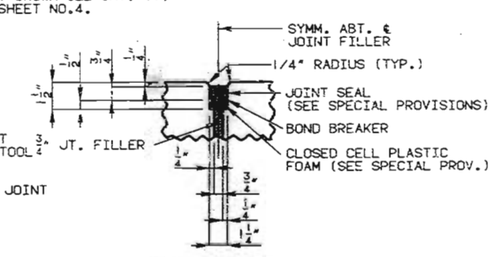

SECTION THRU ¾" JOINT FILLER AT INT. BENTS

DETAILED JAN. 1990
CHECKED JAN. 1990

NOTE: THIS DRAWING IS NOT TO SCALE. FOLLOW DIMENSIONS.

JACKSON COUNTY J-526R

STATE	PROJ. NO.	SHEET NO.
MO.		20

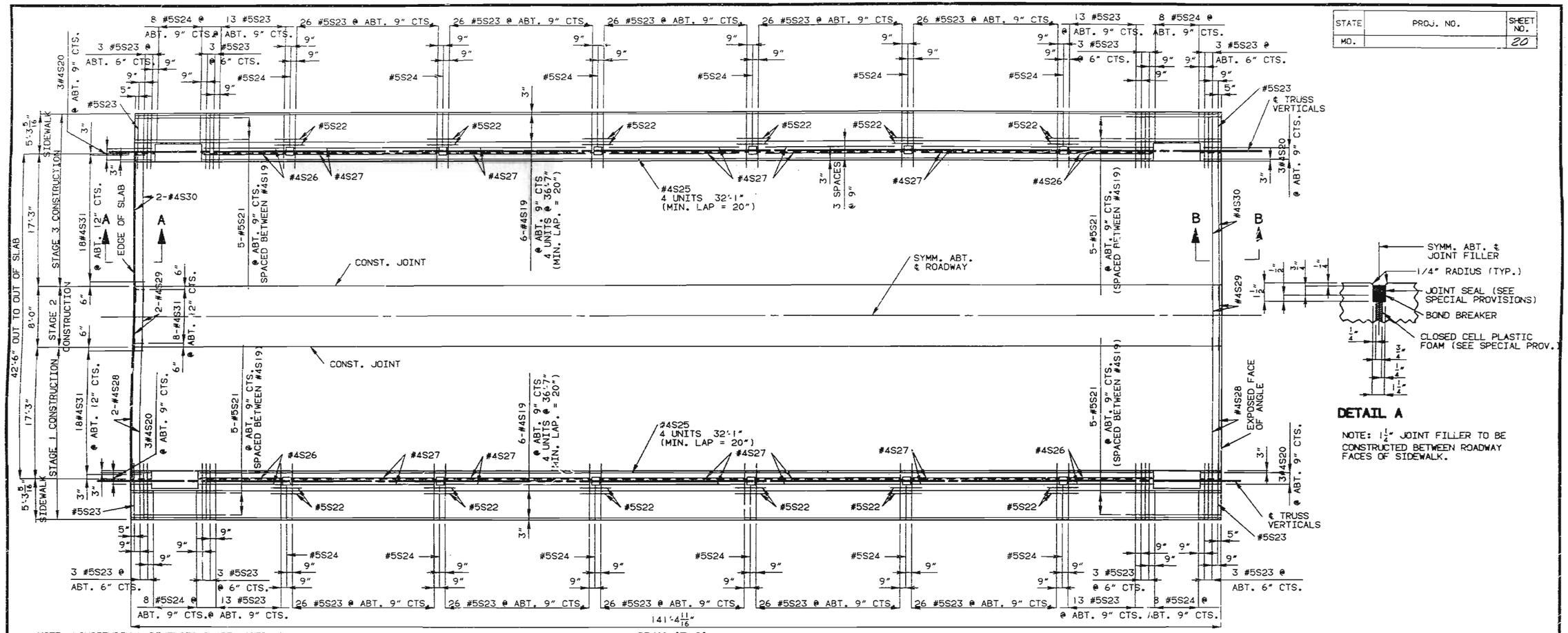

SPAN (5-6)

PART PLAN OF SLAB SHOWING REINFORCEMENT

DETAIL A

NOTE: 1 1/4" JOINT FILLER TO BE CONSTRUCTED BETWEEN ROADWAY FACES OF SIDEWALK.

NOTE: LONGITUDINAL DIMENSIONS ARE HORIZONTAL.
THE CONTRACTOR SHALL POUR AND SATISFACTORILY FINISH THE ROADWAY SLAB AT A RATE OF NOT LESS THAN 25 CUBIC YARDS PER HOUR.
SHIFT #5S23 BARS IN FIELD TO MAINTAIN 1 1/2" CL. TO GRID MEMBERS.
FOR DETAILS OF GRID ATTACHMENT TO STRINGERS SEE SHT. 11.
FOR DETAIL OF ROADWAY CROWN SEE SHT. 11.

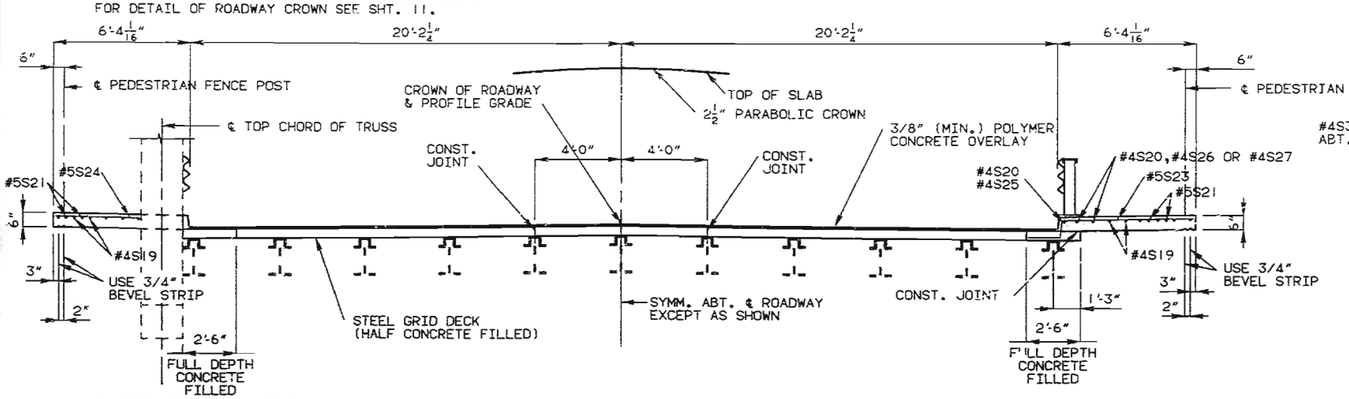

PART SECTION THRU SLAB AT TRUSS VERTICAL

PART SECTION THRU SLAB

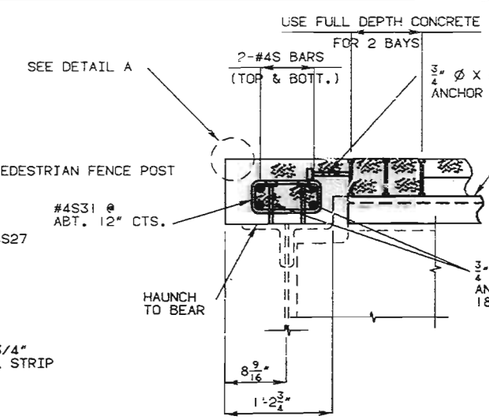

SECTION A-A

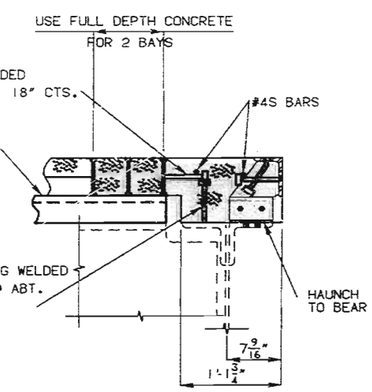

NOTE: FOR DETAILS OF EXPANSION DEVICE AT BENT 6 SEE SHT. 16.

SECTION B-B

DETAILED JAN. 1990
CHECKED JAN. 1990

NOTE: THIS DRAWING IS NOT TO SCALE. FOLLOW DIMENSIONS.

JACKSON COUNTY J-526R

336

STATE	PROJ. NO.	SHEET NO.
MO.		21

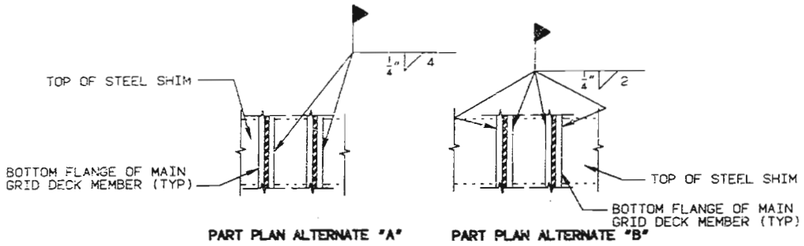

PART PLAN ALTERNATE "A" PART PLAN ALTERNATE "B"

DETAILS FOR WELDING GRID DECK TO SUPPORT MEMBERS

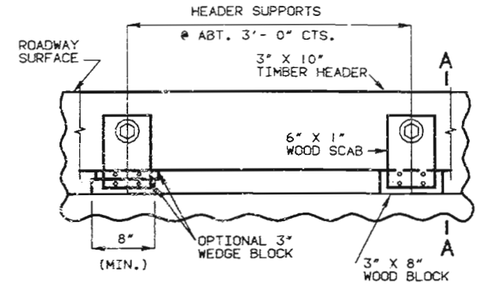

PART ELEVATION

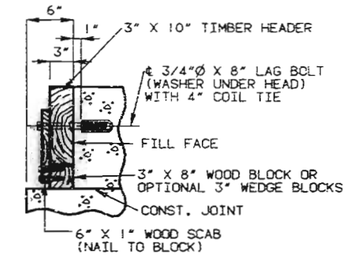

SECTION A-A

DETAILS OF TIMBER HEADER AT END BENTS

NOTE: COST OF TIMBER HEADERS COMPLETE IN PLACE TO BE INCLUDED IN CONTRACT UNIT PRICE FOR CONCRETE.

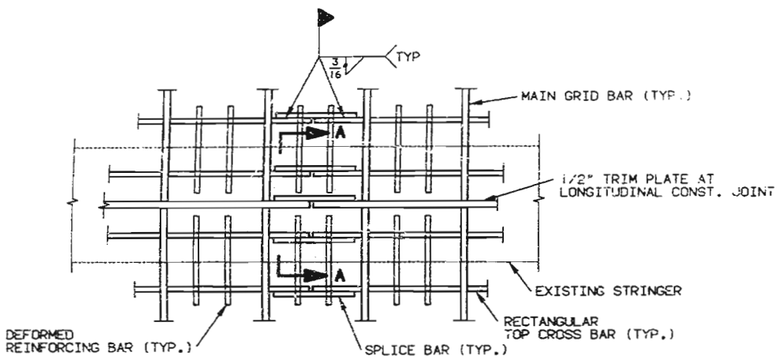

TYPICAL PART PLAN OF GRID SHOWING FIELD SPLICE

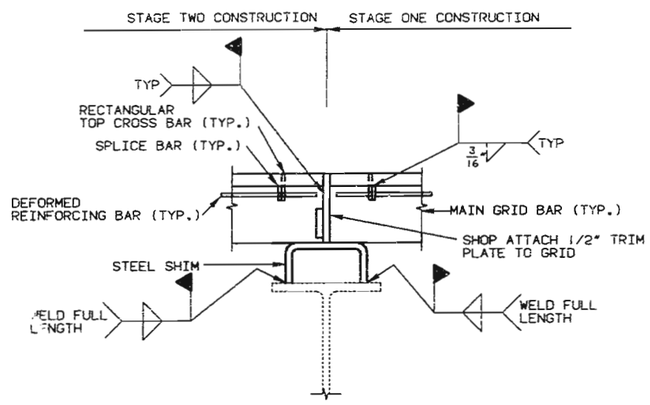

SECTION A-A

(DETAILS BETWEEN STAGE 2 AND STAGE 3 CONSTRUCTION ARE SIMILAR)

NOTE: SHIMS SHALL BE AMERICAN STANDARD CHANNEL (C) OR WELDED PLATES OF NO LESS THAN 3\8" THICKNESS. VARY THE LEGS OF THE SHIMS TO CONFORM GRID TO THE CROWN OF THE ROADWAY.

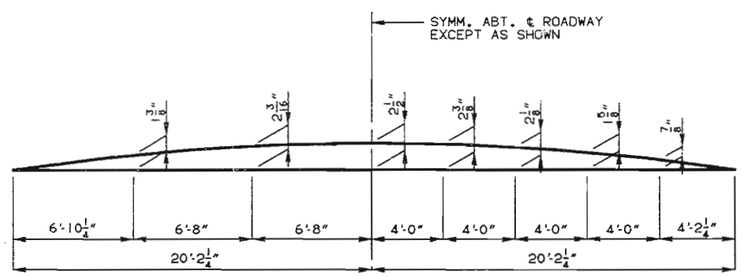

PART SECTION THRU I-BEAM SPANS PART SECTION THRU TRUSS SPAN

DETAIL OF ROADWAY CROWN

DETAILED JAN. 1990
CHECKED JAN. 1990

NOTE: THIS DRAWING IS NOT TO SCALE. FOLLOW DIMENSIONS.

JACKSON COUNTY J-526R

186 337

STATE	PROJ. NO.	SHEET NO.
MO.		22

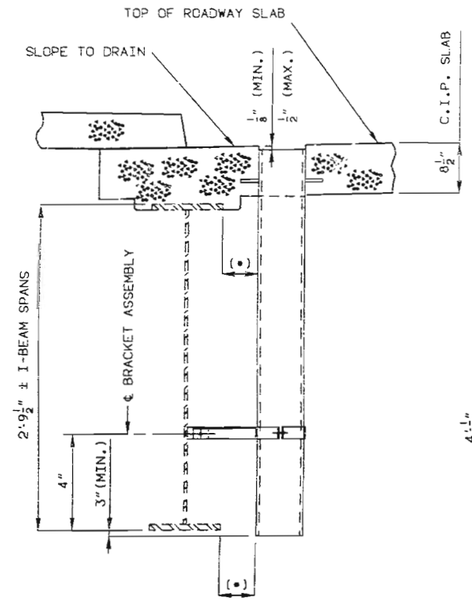

PART ELEVATION OF SLAB AT DRAIN

(I-BEAM SPANS)

(*) MAINTAIN 1" CLEARANCE

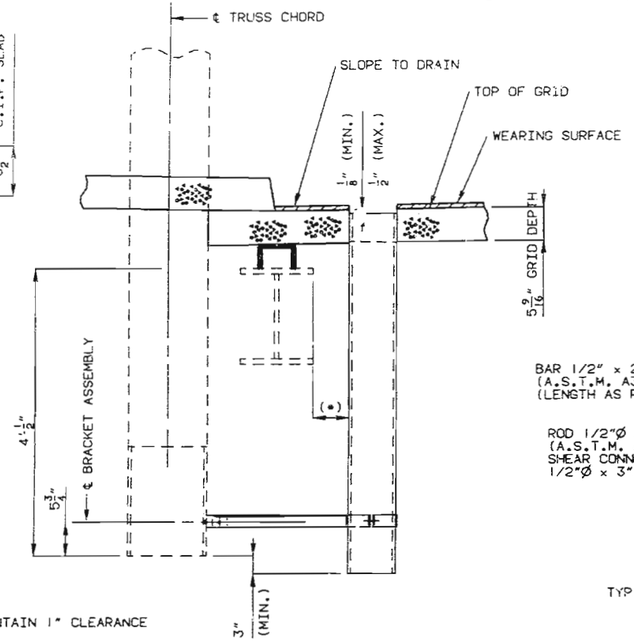

PART ELEVATION OF SLAB AT DRAIN

(TRUSS SPAN)

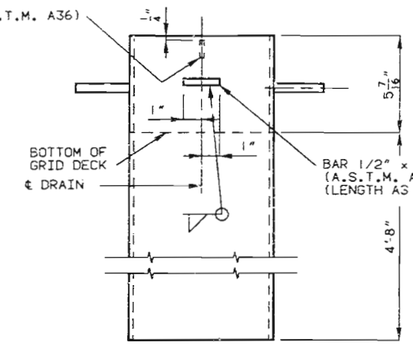

ELEVATION OF DRAIN

(TRUSS SPAN)

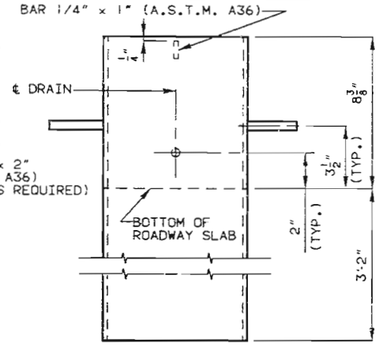

ELEVATION OF DRAIN

(I-BEAM SPANS)

GENERAL NOTES:

SLAB DRAINS MAY BE FABRICATED OF EITHER 1/4" WELDED SHEETS OF A.S.T.M. A36 STEEL OR FROM 1/4" STRUCTURAL STEEL TUBING A.S.T.M. A500 OR A501.

OUTSIDE DIMENSIONS OF DRAINS ARE 8" x 4".

LOCATE DRAINS IN THE SLAB BY DIMENSIONS SHOWN IN THE PART ELEVATION.

SHIFT REINFORCING IN FIELD WHERE NECESSARY TO CLEAR DRAINS.

THE DRAINS AND BRACKET ASSEMBLY SHALL BE GALVANIZED IN ACCORDANCE WITH A.S.T.M. A123.

ALL BOLTS, HARDENED WASHERS, LOCK WASHERS AND NUTS SHALL BE GALVANIZED IN ACCORDANCE WITH A.S.T.M. A153.

THE BOLT HOLE FOR THE BRACKET ASSEMBLY ATTACHMENT SHALL BE FIELD DRILLED.

SHOP DRAWINGS WILL NOT BE REQUIRED FOR SLAB DRAINS AND THE BRACKET ASSEMBLY.

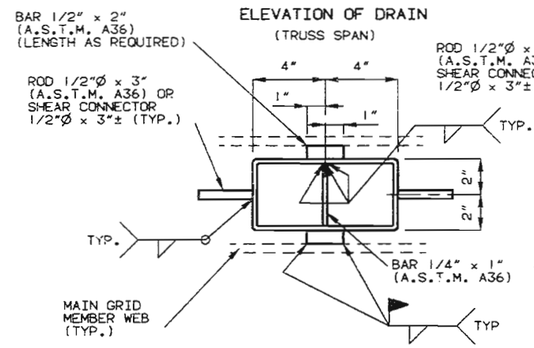

PLAN OF DRAIN

(TRUSS SPAN)

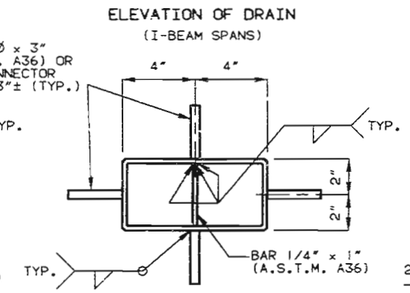

PLAN OF DRAIN

(I-BEAM SPANS)

NOTE: CUT GRID SECONDARY MEMBERS AND GRID DECK REINFORCING BARS AS REQUIRED FOR PLACING DECK DRAINS IN TRUSS SPAN. DRAINS TO BE PLACED 1/8" BELOW TOP OF POLYMER CONCRETE OVERLAY.

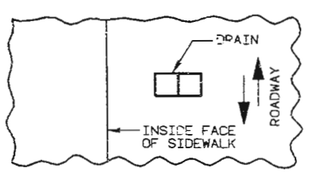

PART PLAN OF SLAB AT DRAIN

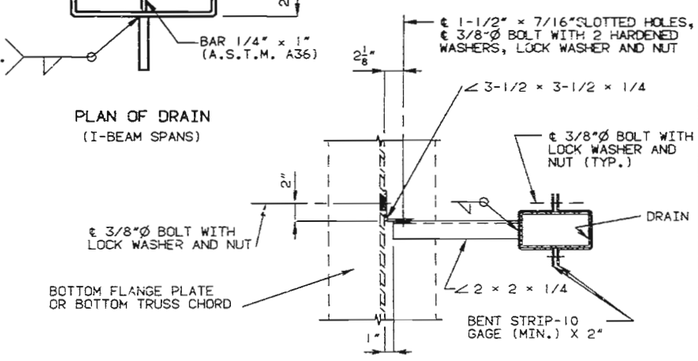

PART PLAN SHOWING BRACKET ASSEMBLY

SLAB DRAIN DETAILS

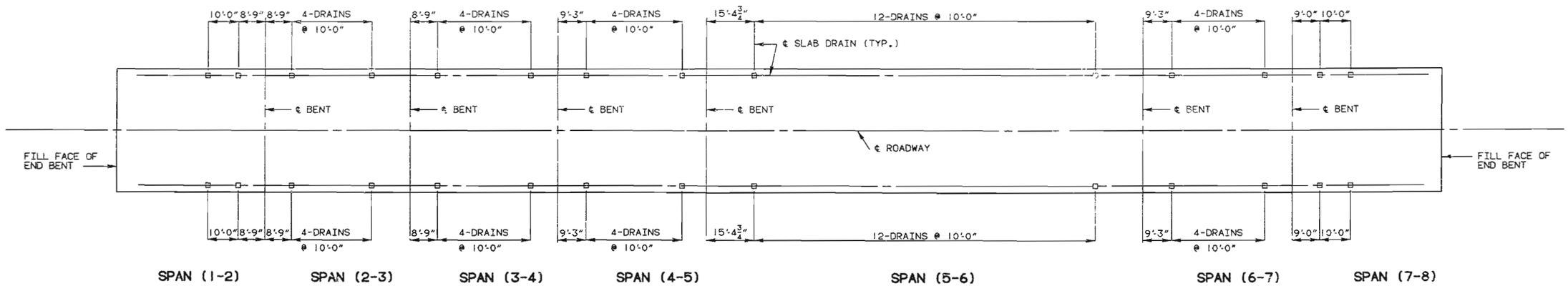

PLAN OF SLAB SHOWING SLAB DRAIN LOCATIONS

DETAILED JAN. 1990
CHECKED JAN. 1990

NOTE: THIS DRAWING IS NOT TO SCALE. FOLLOW DIMENSIONS.

SHEET NO. 12 OF 18

JACKSON COUNTY J-526R

182338

STATE	PROJ. NO.	SHEET NO.
MD.		23

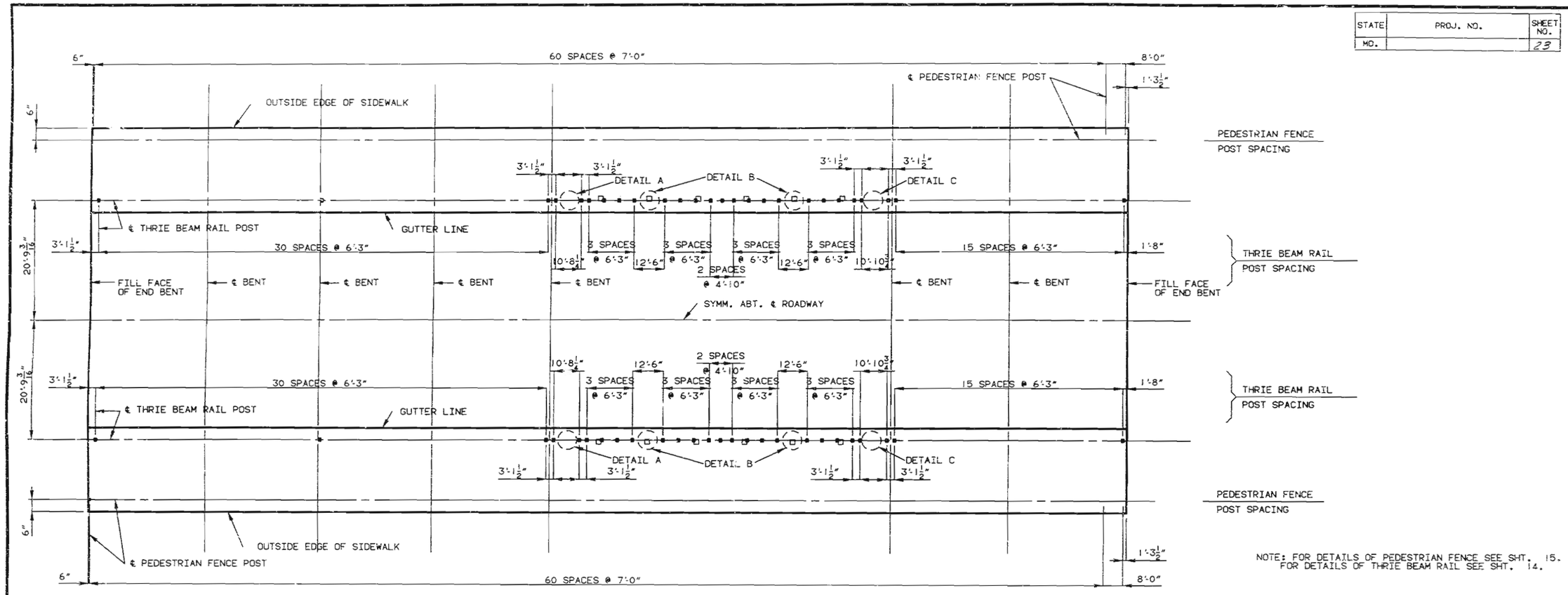

SPAN (1-2) SPAN (2-3) SPAN (3-4) SPAN (4-5) SPAN (5-6) SPAN (6-7) SPAN (7-8)

PLAN OF SLAB SHOWING POST SPACING

NOTE: FOR DETAILS OF PEDESTRIAN FENCE SEE SHT. 15.
FOR DETAILS OF THRIE BEAM RAIL SEE SHT. 14.

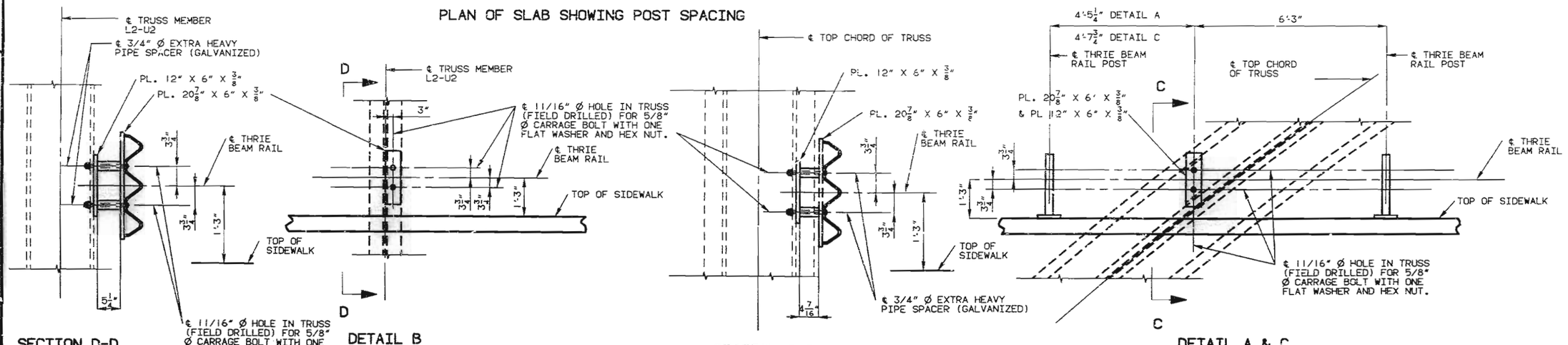

DETAILED JAN. 1990
CHECKED JAN. 1990

NOTE: THIS DRAWING IS NOT TO SCALE. FOLLOW DIMENSIONS.

JACKSON COUNTY J-526R

MISSOURI HIGHWAY AND TRANSPORTATION COMMISSION

STATE	PROJ. NO.	SHEET NO.
MO.		24

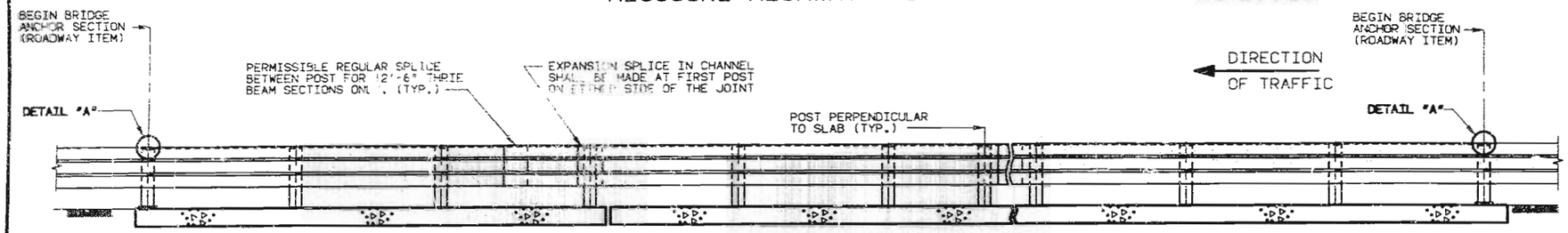

PART SECTION THRU SLAB SHOWING THRIE BEAM RAIL

NOTE: FOR RAIL POST SPACING SEE SHEET NO. 13.

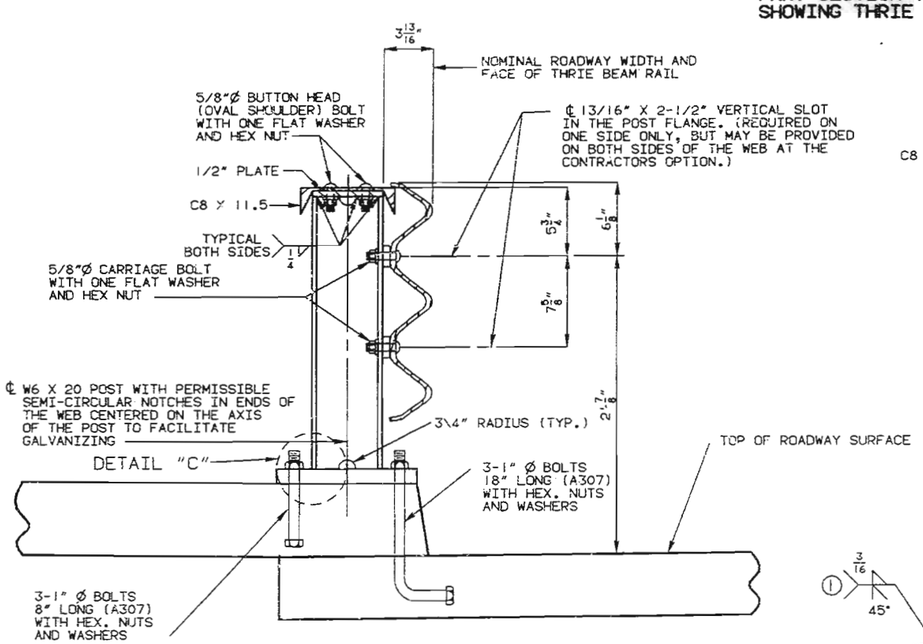

PART SECTION AT RAIL POST

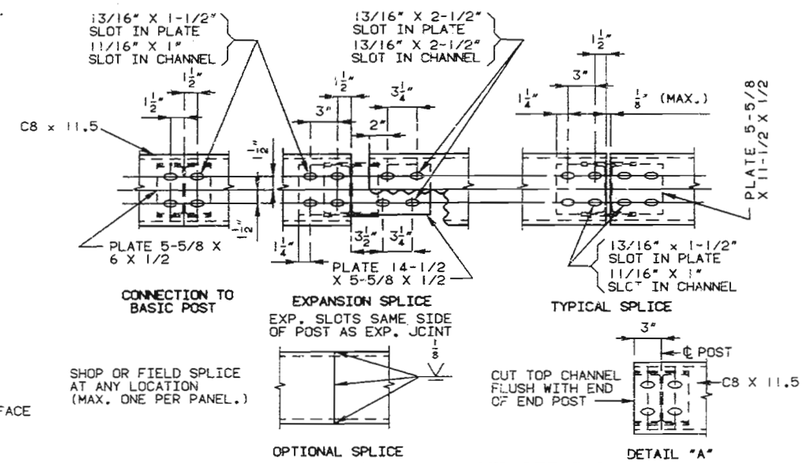

CHANNEL MEMBER DETAILS

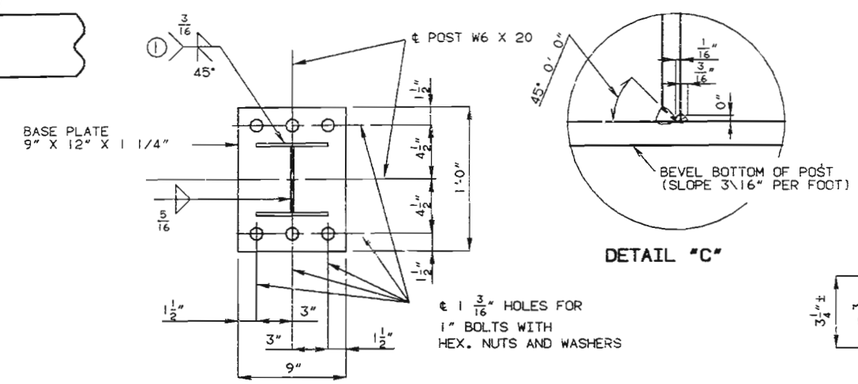

DETAILS OF BASE PLATE

(1) (TYP. BOTH FLANGES) OPTIONAL WELD (POST TO BASE PLATE) 5/16" FILLET WELD ALL AROUND (INCLUDING EDGES OF FLANGE) IN LIEU OF WELD SHOWN.

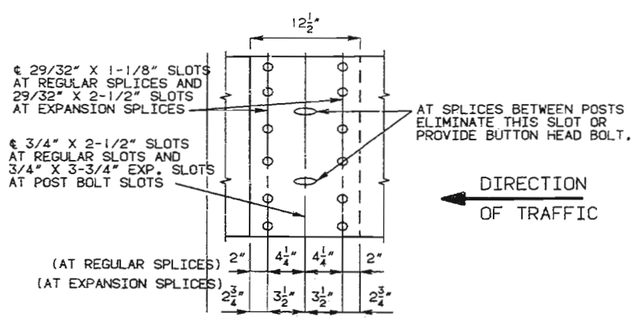

THRIE BEAM RAIL SPLICE DETAILS

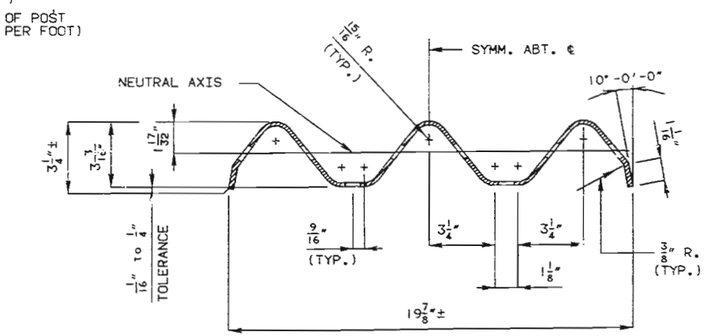

SECTION THRU THRIE BEAM RAIL

GENERAL NOTES FOR THRIE BEAM:

DESIGN AASHTO 1989 SPECIFICATIONS.

PANEL LENGTHS OF CHANNEL MEMBERS SHALL BE ATTACHED CONTINUOUSLY TO A MINIMUM OF FOUR POSTS AND A MAXIMUM OF SIX POSTS (EXCEPT AT THE END BENTS).

ALL BOLTS, NUTS, WASHERS, AND PLATES ARE CONSIDERED AS PART OF THE THRIE BEAM RAIL FOR PAYMENT.

ALL STEEL CONNECTING BOLTS AND FASTENERS FOR POSTS AND RAILING, AND ALL ANCHOR BOLTS, NUTS, WASHERS, TOP PLATES & BASE PLATES SHALL BE GALVANIZED AFTER FABRICATION. FOR PROTECTIVE COATING AND MATERIAL REQUIREMENT OF STEEL RAILING, SEE SECTION 1040 OF THE MISSOURI STANDARD SPECIFICATIONS.

RAIL POSTS SHALL BE SET PERPENDICULAR TO THE ROADWAY PROFILE GRADE AND VERTICALLY IN CROSS SECTION, AND ALIGNED ACCORDING TO SECTION 713 OF THE STANDARD SPECIFICATIONS, EXCEPT THAT THE RAIL POSTS SHALL BE ALIGNED BY THE USE OF SHIMS SO THAT IN THE FINAL ADJUSTMENT NO PART SHALL DEVIATE MORE THAN ONE INCH FROM TRUE HORIZONTAL ALIGNMENT. THE SHIMS SHALL BE 3" X 1-3/4" AND PLACED BETWEEN THE POST AND THRIE BEAM RAIL. THE THICKNESS OF THE SHIMS SHALL BE DETERMINED BY THE CONTRACTOR AND VERIFIED BY THE ENGINEER BEFORE ORDERING THE MATERIAL FOR THIS WORK.

AT THE EXPANSION SLOTS IN THE THRIE BEAM RAILS AND CHANNELS, TIGHTEN BOLTS, BACK OFF ONE- HALF TURN AND BURR THREADS.

USE 5/8 INCH BUTTON HEAD, OVAL SHOULDER BOLTS WITH HEX NUTS TO BE USED AT ALL SLOTS. (THICKNESS OF HEX NUTS = 3/8".)

THRIE BEAM GUARD RAIL ON THE BRIDGE SHALL BE MADE OF STEEL AND SHALL BE 12 GAGE. THE POST, POST ATTACHMENTS, CHANNELS AND CHANNEL SPLICE PLATES ARE TO BE FABRICATED FROM A-36 STEEL AND GALVANIZED.

WASHERS SHALL BE USED AT ALL POST BOLTS (BETWEEN THE BOLT HEAD AND THRIE BEAM). THEY SHALL BE RECTANGULAR IN SHAPE (3" X 1-3/4" X 3/16" MIN.) AND FLAT WITH A 11/16" X 1" SLOT, OR WHEN NECESSARY OF SUCH DESIGN TO FIT THE CONTOUR OF THE BEAM. (USE A 3" X 1-3/4" X 5/8" RECTANGULAR WASHER BETWEEN THE POST AND THE THRIE BEAM RAIL)

SPECIAL DRILLING OF THE THRIE BEAM MAY BE REQUIRED AT THE SPLICES. (ALL DRILLING DETAILS ARE TO BE SHOWN ON THE SHOP DRAWINGS.)

FABRICATION OF THE STRUCTURAL STEEL SHALL BE IN ACCORDANCE WITH SECTION 712 OF THE MO. STANDARD SPECIFICATIONS.

EXPANSION SPLICES IN THE THRIE BEAM RAIL SHALL BE MADE AT EITHER THE FIRST OR SECOND POST ON EITHER SIDE OF THE JOINT AND ON STRUCTURE AT BRIDGE ENDS. WHEN THE SPLICE IS MADE AT THE SECOND POST, AN EXPANSION SLOT SHALL BE PROVIDED IN THE THRIE BEAM RAIL FOR CONNECTION TO THE FIRST POST TO ALLOW FOR MOVEMENT.

CONTRACTOR SHALL VERIFY ALL DIMENSIONS IN FIELD BEFORE ORDERING MATERIALS.

MINIMUM LENGTH OF THRIE BEAM SECTIONS IS EQUAL TO ONE POST SPACE.

RAIL POSTS SHALL BE SEATED ON ELASTOMERIC PADS HAVING THE SAME DIMENSIONS AS POST BASE PLATE AND 1\16" THICK. SUCH PADS MAY BE ANY ELASTOMERIC MATERIAL, PLAIN OR FIBERED, HAVING A HARDNESS (DUROMETER) 50 OR ABOVE, AS CERTIFIED BY THE MANUFACTURE. ADDITIONAL PADS OR HALF PADS MAY BE USED IN SHIMMING FOR ALIGNMENT.

STATE	PROJ. NO.	SHEET NO.
MO.		25

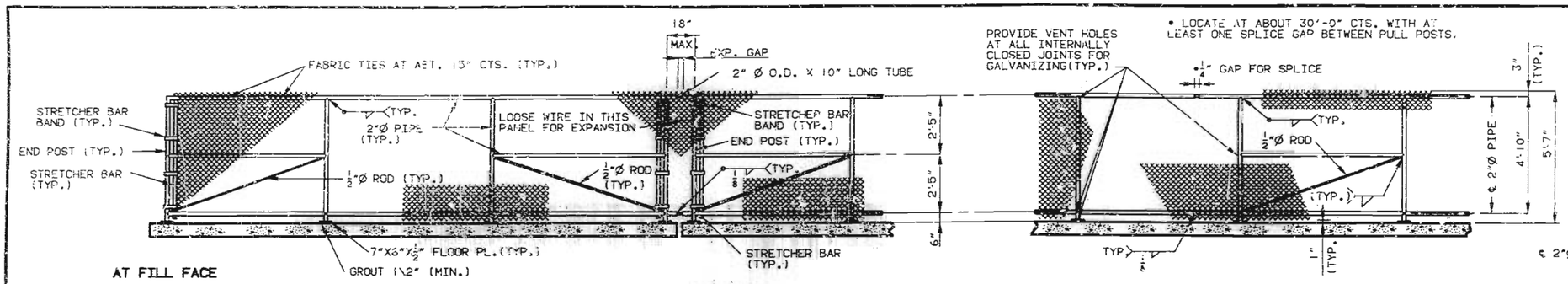

PART ELEVATION OF 5'-6" GALVANIZED STEEL GUARD FENCE

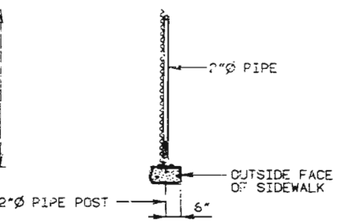

SECTION THRU FENCE

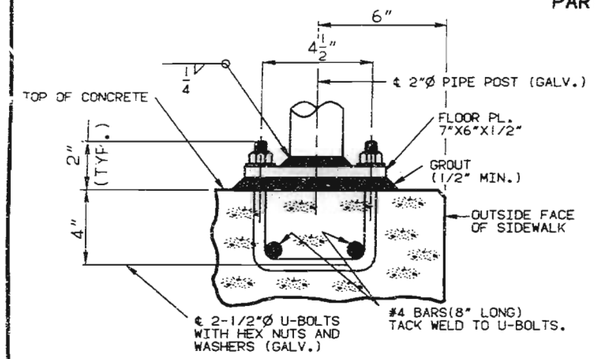

FENCE POST CONNECTION

NOTE: FOR PIPE POST SPACING SEE SHT. 13.

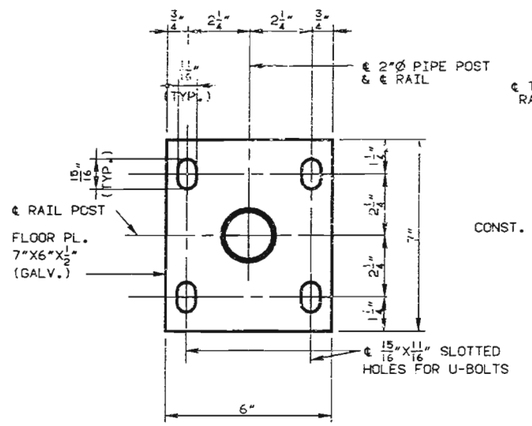

PLAN OF FLOOR PLATE

DETAILS OF PEDESTRIAN GUARD FENCE

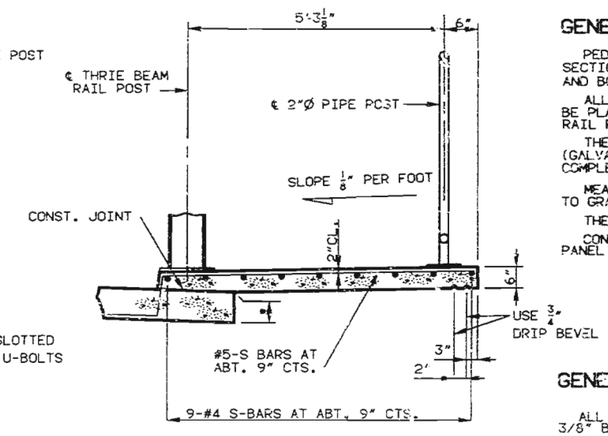

• THEORETICAL SLAB THICKNESS.

TYPICAL SECTION THRU SIDEWALK

GENERAL NOTES FOR PEDESTRIAN GUARD FENCE:

PEDESTRIAN GUARD FENCE (CHAIN LINK TYPE) SHALL BE IN ACCORDANCE WITH SECTION 1043 OF THE MO. STD. SPEC., EXCEPT ALL FABRIC SHALL HAVE THE TOP AND BOTTOM EDGES KNUCKLED.

ALL RAIL POSTS SHALL BE VERTICAL. GROUT OF 1/2" MINIMUM THICKNESS SHALL BE PLACED UNDER THE FLOOR PLATES TO PROVIDE FOR VERTICAL ALIGNMENT OF RAIL POSTS.

THE CONTRACT UNIT PRICE PER LINEAR FOOT FOR PEDESTRIAN GUARD FENCE (GALVANIZED) SHALL INCLUDE FURNISHING AND ERECTING THE FENCE AND FRAME COMPLETE WITH ANCHOR BOLTS, WASHERS, NUTS AND #4 REINFORCING BARS.

MEASUREMENT OF THE PEDESTRIAN GUARD FENCE SHALL BE TAKEN PARALLEL TO GRADE THROUGH THE CENTERLINE OF POSTS.

THE MAXIMUM SPACING ALLOWED FOR THE BRACED PANELS (PULL POSTS) IS 100 FT.

CONNECT THE LOWER END OF THE 1/2"Ø ROD TO THE END OF THE BRACED PANEL TO WHICH THE STRETCHER BAR IS ATTACHED.

GENERAL NOTES FOR SIDEWALK:

ALL EXPOSED EDGES OF THE SIDEWALK SHALL HAVE EITHER A 1/2" RADIUS OR A 3/8" BEVEL, UNLESS OTHERWISE NOTED.

WHEN THE SIDEWALK IS BID BY SQUARE FEET, THE CONTRACT UNIT PRICE SHALL INCLUDE THE COST OF ALL CONCRETE AND REINFORCEMENT, COMPLETE IN PLACE.

CONCRETE IN THE SIDEWALK SHALL BE CLASS B2.

MEASUREMENT OF THE SIDEWALK IS TO THE NEAREST SQUARE FOOT FOR EACH STRUCTURE, MEASURED FROM THE GUTTER LINE TO THE OUTSIDE EDGE OF SIDEWALK AND FROM FILL FACE TO FILL FACE OF END BENTS.

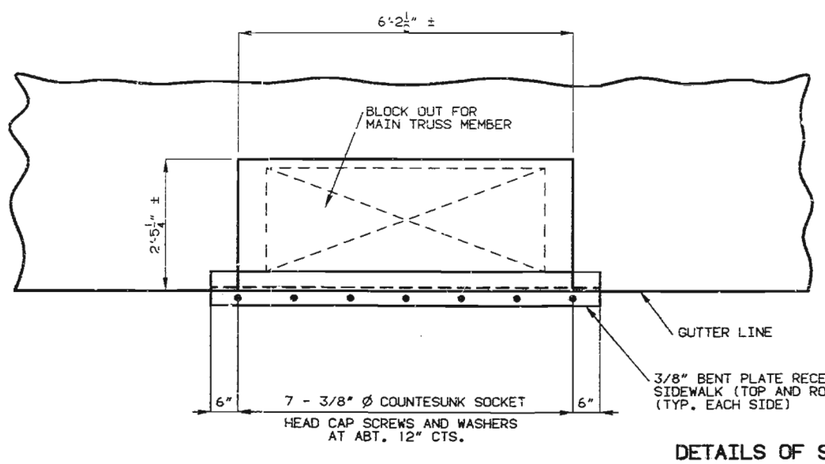

NOTE: MAINTAIN 2" CL. BETWEEN VERTICAL TRUSS MEMBERS AND CONCRETE SLAB.

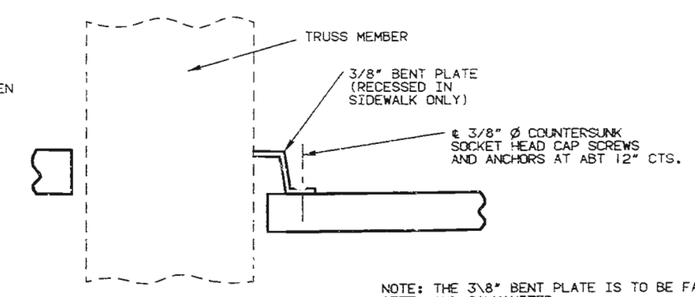

NOTE: THE 3/8" BENT PLATE IS TO BE FABRICATED FROM A-36 STEEL AND GALVANIZED.

DETAILS OF SIDEWALK AT TRUSS MEMBERS

DETAILED JAN. 1990
CHECKED JAN. 1990

NOTE: THIS DRAWING IS NOT TO SCALE. FOLLOW DIMENSIONS.

JACKSON COUNTY J-526R

198 341

STATE	PROJ. NO.	SHEET NO.
MO.		26

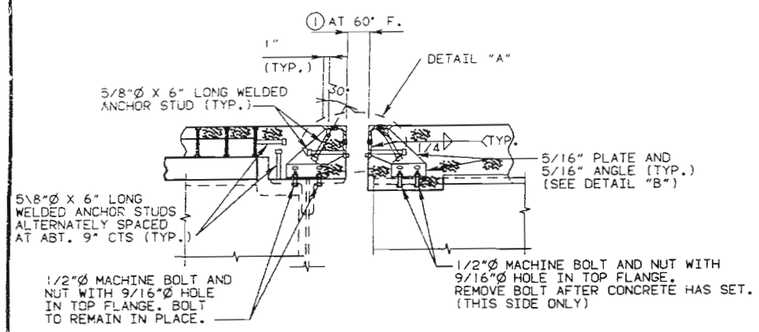

PART SECTION D-D

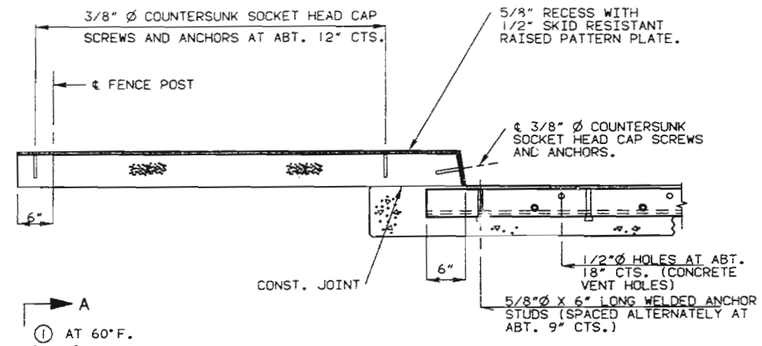

GENERAL NOTES:

STRUCTURAL STEEL FOR EXPANSION DEVICE SHALL BE FABRICATED TO MATCH STAGED CONSTRUCTION.

THE EXPANSION DEVICE SHALL BE BENT TO CONFORM TO CROWN AND GRADE OF ROADWAY.

STRUCTURAL STEEL FOR THE ARMORED JOINT SHALL BE GRADE A36.

ANCHORS FOR COMPRESSION SEAL ARMOR SHALL BE APPROVED STUD WELDED ANCHORS (C1010 THRU C1020).

PLAN DIMENSIONS ARE BASED ON INSTALLATION AT 60°F.

DIMENSION ① SHALL BE INCREASED 1/8" FOR EACH 10° FALL IN TEMPERATURE AND DECEASED 1/8" FOR EACH 10° RISE IN TEMPERATURE AT INSTALLATION.

SEE SPECIAL PROVISIONS FOR THE REQUIREMENTS OF COMPRESSION JOINT SEAL.

FURNISHING, PAINTING AND INSTALLING THE STRUCTURAL STEEL ARMORED JOINT AND SIDEWALK PLATES SHALL BE INCLUDED IN CONTRACT UNIT PRICE FOR PREFORMED EXPANSION JOINT SEAL.

NEOPRENE EXTRUSIONS SHALL MEET A.S.T.M. D3542-83.

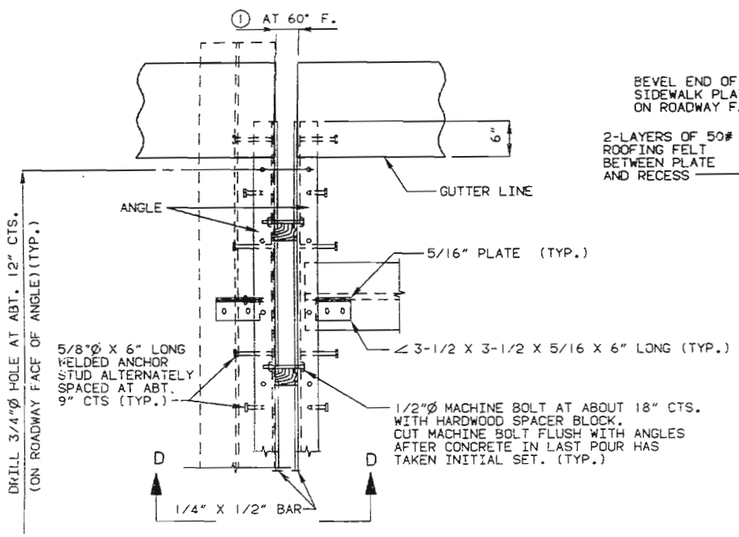

PART PLAN

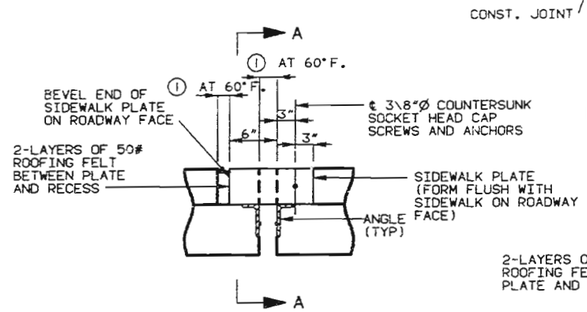

PART ELEVATION OF SIDEWALK

PART SECTION A-A

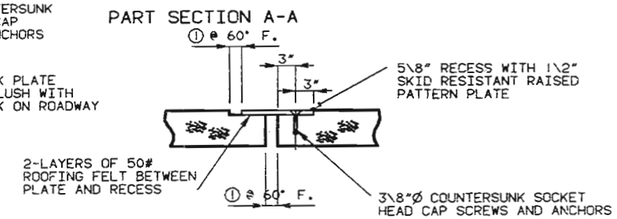

PART SECTION THR'! SIDEWALK

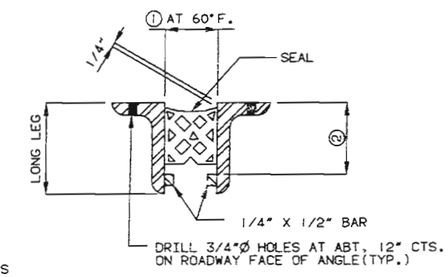

PART CROSS SECTION THRU EXPANSION JOINT

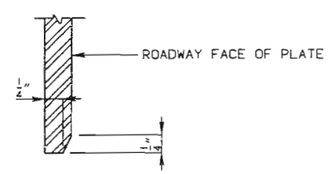

DETAILS OF BEVELED SIDEWALK PLATE

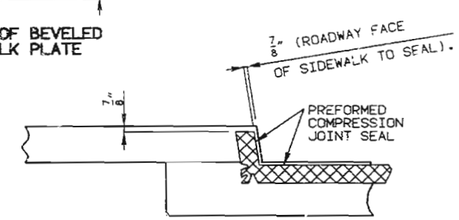

PART SECTION THRU JOINT SEAL

USE @ BT. 6

TABLE OF TRANSVERSE BRIDGE SEAL DIMENSIONS			
SEAL (WIDTH)	①	②	REQUIRED MOVEMENT RANGE
2.5"	1-5/8"	SEAL DEPTH + 3/4"	0.9"
3.0"	1-7/8"	SEAL DEPTH + 3/4"	1.0"
3.5"	2-1/4"	SEAL DEPTH + 3/4"	1.3"
4.0"	2-5/8"	SEAL DEPTH + 3/4"	1.6"
4.5"	2-3/4"	SEAL DEPTH + 3/4"	1.9"
5.0"	2-7/8"	SEAL DEPTH + 3/4"	2.0"

NOTE: DEPTH OF SEAL SHALL NOT BE LESS THAN WIDTH OF SEAL.

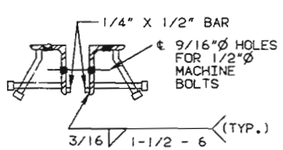

DETAIL "A"

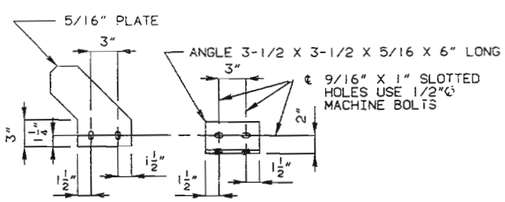

DETAIL "B"

SIZE OF ARMOR JOINT

VERTICAL LEG OF ANGLE SHALL BE A MINIMUM OF DEPTH OF SEAL + 1-1/2". HORIZONTAL LEG OF ANGLE SHALL BE A MINIMUM OF 3". MINIMUM THICKNESS OF ANGLE SHALL BE 1/2"..

IF A SEAL SIZE LARGER THAN THAT INDICATED ON THE PLANS IS USED, THE MOVEMENT RANGE, THE OPENING AT 60° AND ALL DIMENSIONS FOR THE ARMOR ANGLES SHALL BE SHOWN ON THE SHOP DRAWINGS.

DETAILS OF PREFORMED COMPRESSION JOINT SEAL AT BENT NO. 6

PCJS-S.L INT-SO	REVISED
OCT. 1973	MAY 1987

DETAILED JAN. 1990
CHECKED JAN. 1990

NOTE: THIS DRAWING IS NOT TO SCALE. FOLLOW DIMENSIONS.

JACKSON COUNTY J-526R

STATE	PROJ. NO.	SHEET NO.
MO.		27

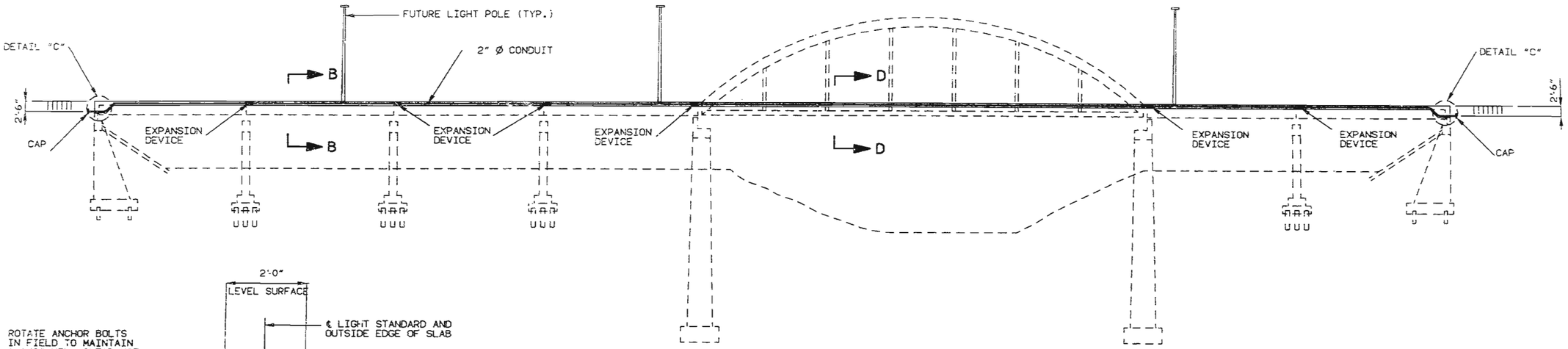

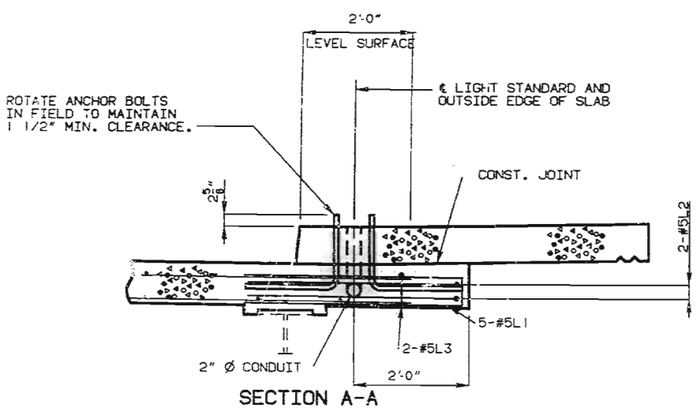

SECTION A-A

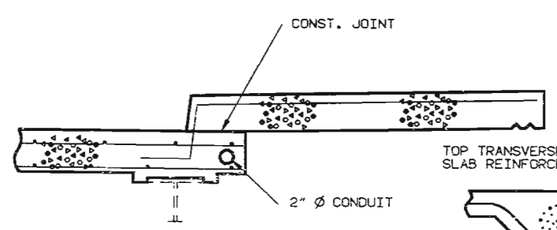

SECTION B-B

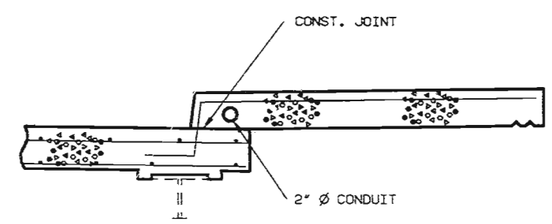

SECTION D-D

NOTE: CONDUIT BETWEEN LIGHT STANDARDS ADJACENT TO TRUSS SPAN SHALL BE PLACED IN SIDEWALK TO AVOID GRID DECKING.

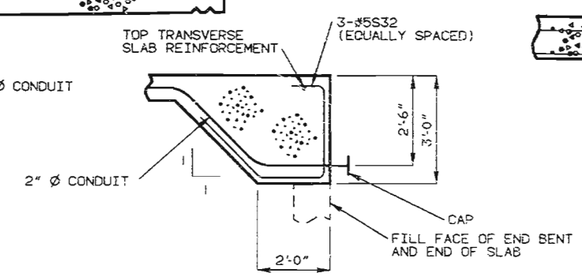

DETAIL "C"

(AT BLOCKOUT IN BACKWALL)

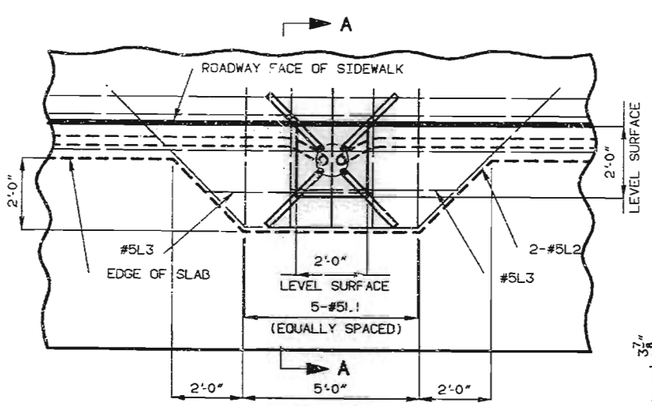

PART PLAN
AT LIGHT STANDARD

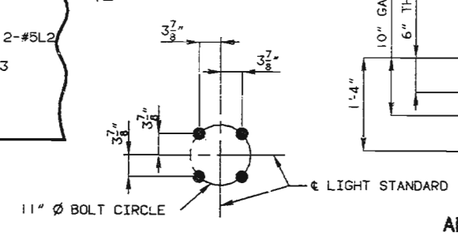

PLAN OF ANCHOR BOLT

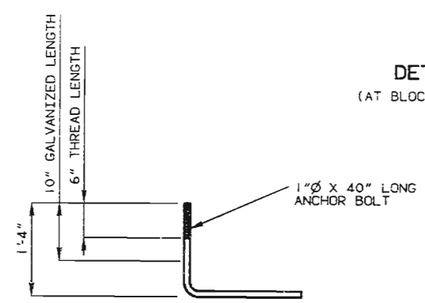

ANCHOR BOLT DETAIL

NOTES FOR CONDUIT:

COST OF FURNISHING AND PLACING ANCHOR BOLTS FOR LIGHT STANDARDS SHALL BE INCLUDED IN THE CONTRACT UNIT PRICE FOR OTHER ITEMS.

ALL CONDUIT SHALL BE RIGID NON-METALLIC SCHEDULE 40 HEAVY WALL PVC (POLYVINYL CHORIDE PLASTIC) WITH 3" MINIMUM COVER IN CONCRETE. EACH SECTION OF CONDUIT SHALL BEAR THE UNDERWRITERS' LABORATORIES, INC., (UL) LABEL.

SHIFT REINFORCING STEEL IN FIELD WHERE NECESSARY TO CLEAR CONDUIT AND JUNCTION BOXES.

LIGHT STANDARDS, WIRING AND FIXTURES SHALL BE FURNISHED AND INSTALLED BY OTHERS.

TOP OF LIGHT STANDARD SUPPORTS SHALL BE MADE HORIZONTAL; ANCHOR BOLTS SHALL BE PLACED VERTICALLY.

EXPANSION FITTINGS SHALL PROVIDE A MINIMUM MOVEMENT IN EITHER DIRECTION OF 1" AT JOINTS. EXPANSION FITTINGS SHALL BE EQUAL TO CARLON ELECTRICAL CONSTRUCTION PRODUCTS OR TRIANGLE CONDUIT AND CABLE COMPANY, INC.

THE CONDUIT TERMINATIONS SHALL BE PERMANENT OR SEPARABLE. THE TERMINATIONS AND COVERS SHALL BE OF WATERTIGHT CONSTRUCTION.

WEEPHOLES SHALL BE PROVIDED AT APPROPRIATE LOCATIONS TO DRAIN ANY MOISTURE IN THE CONDUIT LINES.

COST OF FURNISHING AND INSTALLING CONDUIT SYSTEM COMPLETE-IN-PLACE SHALL BE PAID FOR AT THE CONTRACT UNIT PRICE FOR CONDUIT SYSTEM ON STRUCTURE.

DETAILED SEPT. 1990
CHECKED NOV. 1990

NOTE: THIS DRAWING IS NOT TO SCALE. FOLLOW DIMENSIONS.

JACKSON COUNTY J-526R

177 343

COMPLETE BILL OF REINFORCING STEEL

NO. REQ'D.	MARK NO. SIZE	MARK NO. MARK	LOCATION	EPOXY (E)	SHAPE NO.	STIRRUP (S)	SUBSTR. (X)	VARIES (V)	NO. EACH	B FT. IN.	C FT. IN.	D FT. IN.	E FT. IN.	F FT. IN.	H FT. IN.	K FT. IN.	NOMINAL LENGTH FT. IN.	ACTUAL LENGTH FT. IN.	WEIGHT LBS.
			END BENT 1																
2		SH1	BACKWALL		20		X			8 0.000							8 0	8 0	17
6		SH2	BACKWALL		20		X			9 1.000							9 1	9 1	57
6		SH3	BACKWALL		20		X	V	2	27 6.000							27 6	27 6	
			INCREMENT = 19.500 INCH							30 9.000							30 9	30 9	182
1		4H4	BACKWALL		20		X			16 10.000							16 10	16 10	11
1		4H5	BACKWALL		20		X			8 5.000							8 5	8 5	6
1		4H6	BACKWALL		20		X			19 0.000							19 0	19 0	13
4		5H7	BACKWALL		20		X			7 0.000							7 0	7 0	29
4		5H8	BACKWALL		20		X			17 6.000							17 6	17 6	73
2		5H9	BACKWALL		20		X			30 9.000							30 9	30 9	64
2		5H10	BACKWALL		20		X			9 8.000							9 8	9 8	20
41		4U2	BACKWALL		10	S	X				15.000	6.000					3 0	2 10	78
82		5V1	BACKWALL		20		X			3 6.000							3 6	3 6	299
32		5V2	BACKWALL		20		X			4 0.000							4 0	4 0	134
12		5V3	BACKWALL		20		X	V	4	2 0.000							2 0	2 0	
			INCREMENT = 8.000 INCH							3 4.000							3 4	3 4	33
			PIER 5																
4		5H20	BEAM		20		X			4 9.000							4 9	4 9	20
5		5U20	BEAM		10	S	X				2 8.000	12.000					6 4	6 2	32
			PIER 6																
4		5H20	BEAM		20		X			4 9.000							4 9	4 9	20
5		5U20	BEAM		10	S	X				2 8.000	12.000					6 4	6 2	32
			END BENT 8																
2		5H1	BACKWALL		20		X			8 0.000							8 0	8 0	17
6		5H2	BACKWALL		20		X			9 1.000							9 1	9 1	57
6		5H3	BACKWALL		20		X	V	2	27 6.000							27 6	27 6	
			INCREMENT = 19.500 INCH							30 9.000							30 9	30 9	182
1		4H4	BACKWALL		20		X			16 10.000							16 10	16 10	11
1		4H5	BACKWALL		20		X			8 5.000							8 5	8 5	6
1		4H6	BACKWALL		20		X			19 0.000							19 0	19 0	13
4		5H7	BACKWALL		20		X			7 0.000							7 0	7 0	29
4		5H8	BACKWALL		20		X			17 6.000							17 6	17 6	73
2		5H9	BACKWALL		20		X			30 9.000							30 9	30 9	64
2		5H10	BACKWALL		20		X			9 8.000							9 8	9 8	20
41		4U2	BACKWALL		10	S	X				15.000	6.000					3 0	2 10	78
82		5V1	BACKWALL		20		X			3 6.000							3 6	3 6	299
32		5V2	BACKWALL		20		X			4 0.000							4 0	4 0	134
12		5V3	BACKWALL		20		X	V	4	2 0.000							2 0	2 0	
			INCREMENT = 8.000 INCH							3 4.000							3 4	3 4	33

COMPLETE BILL OF REINFORCING STEEL

NO. REQ'D.	MARK NO. SIZE	MARK NO. MARK	LOCATION	EPOXY (E)	SHAPE NO.	STIRRUP (S)	SUBSTR. (X)	VARIES (V)	NO. EACH	B FT. IN.	C FT. IN.	D FT. IN.	E FT. IN.	F FT. IN.	H FT. IN.	K FT. IN.	NOMINAL LENGTH FT. IN.	ACTUAL LENGTH FT. IN.	WEIGHT LBS.
140		5S1	SLAB	E	20					25 1.000							25 1	25 1	3463
160		5S2	SLAB	E	20					25 1.000							25 1	25 1	4186
534		5S3	SLAB	E	20					19 0.000							19 0	19 0	10582
534		5S4	SLAB	E	20					8 5.000							8 5	8 5	4688
534		5S5	SLAB	E	20					18 4.000							18 4	18 4	10211
384		5S6	SLAB	E	20					19 0.000							19 0	19 0	7609
384		5S7	SLAB	E	20					8 5.000							8 5	8 5	3371
384		5S8	SLAB	E	20					18 4.000							18 4	18 4	7343
768		5S9	SLAB	E	23					6 0.000	12.000	15.125	15.000	2.000	5 11.000	12.000	8 3	8 1	6475
72		4S10	SLAB	E	20					25 0.000							25 0	25 0	1202
140		5S11	SLAB	E	20					24 6.000							24 6	24 6	3577
160		5S12	SLAB	E	20					24 6.000							24 6	24 6	4089
72		4S13	SLAB	E	20					24 6.000							24 6	24 6	1178
140		5S14	SLAB	E	20					24 10.000							24 10	24 10	3626
160		5S15	SLAB	E	20					24 10.000							24 10	24 10	4144
72		4S16	SLAB	E	20					24 10.000							24 10	24 10	1194
48		4S19	SLAB	E	20					36 7.000							36 7	36 7	1173
12		4S20	SLAB	E	20					2 2.000							2 2	2 2	17
22		5S21	SLAB	E	20					13 2.000							13 2	13 2	302
24		5S22	SLAB	E	20					5 0.000							5 0	5 0	125
340		5S23	SLAB	E	23					15.125	8.250	6 0.500	5 11.500	12.000	15.000	2.000	8 0	7 9	2748
44		5S24	SLAB	E	20					4 2.000							4 2	4 2	191
8		4S25	SLAB	E	20					32 1.000							32 1	32 1	171
8		4S26	SLAB	E	20					10 2.000							10 2	10 2	54
20		4S27	SLAB	E	20					18 4.000							18 4	18 4	245
6		4S28	SLAB	E	20					13 11.000							18 11	18 11	77
8		4S29	SLAB	E	20					9 9.000							9 9	9 9	58
6		4S30	SLAB	E	20					17 0.000							17 0	17 0	68
44		4S31	SLAB	E	13	S				9.500	4.500	9.500	4.500				3 1	2 10	83
6		5S32	SLAB	E	29	S				12.000	? 6.000	?1.000	? 10.000		? 0.000	? 0.000	5 1	? 10	69
15		5L1	LIGHT SUPT.	E	10	S					4 0.000	6.000					8 6	8 4	130
6		5L2	LIGHT SUPT.	E	15	S				5 6.500	4 10.750	5 6.500	3 11.000	3 11.000	3 11.000	3 11.000	16 3	15 11	100
6		5L3	LIGHT SUPT.	E	10	S					4 9.000	6.000					10 0	9 10	62
			END OF LIST																

TWO ADDITIONAL "4S29"/"5S2" ARE INCLUDED IN THE BAR BILL FOR TESTING.

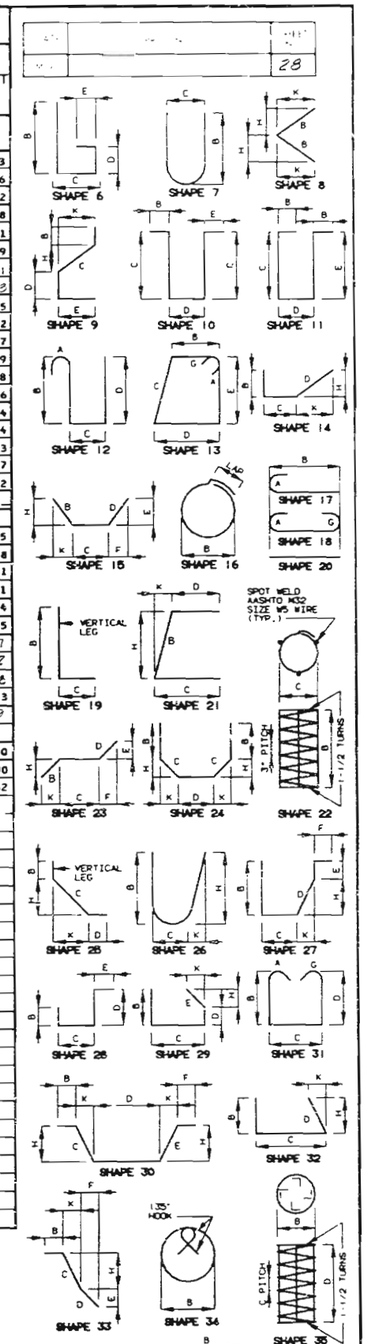

BENDING DIAGRAMS

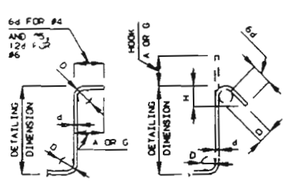

STIRRUP HOOK DIMENSIONS				
GRADES 40 - 50 - 60 KSI				
BAR SIZE	D (IN.)	90° HOOK: HOOK A OR G	135° HOOK: HOOK A OR G	135° HOOK: APPROX. H
#4	2"	4-1/2"	4-1/2"	3"
#5	2-1/2"	6"	5-1/2"	3-3/4"
#6	4-1/2"	12"	8"	4-1/2"

NOTE: UNLESS OTHERWISE NOTED DIAMETER "D" IS THE SAME FOR ALL BENDS AND HOOKS ON A BAR.

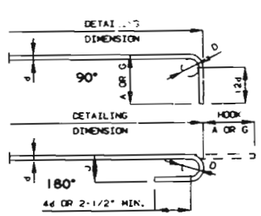

END HOOK DIMENSIONS				
		ALL GRADES		
BAR SIZE	D (IN.)	180 HOOKS: A OR G	180 HOOKS: J	90 HOOKS: A OR G
#3	2-1/4"	5"	3"	6"
#4	3"	6"	4"	8"
#5	3-3/4"	7"	5"	10"
#6	4-1/2"	8"	6"	12"
#7	5-1/4"	10"	7"	14"
#8	6"	11"	8"	16"
#9	9-1/2"	15"	11-3/4"	19"
#10	10-3/4"	17"	13-1/4"	22"
#11	12"	19"	14-3/4"	2'-0"
#14	18-1/4"	2'-3"	21-3/4"	2'-7"

NOTE:
ALL STANDARD HOOKS AND BENDS OTHER THAN 180 DEG. TO BE BENT WITH THE SAME PROCEDURE AS FOR 90 DEG. STD. HOOKS.
HOOKS AND BENDS SHALL BE IN ACCORDANCE WITH THE PROCEDURES AS SHOWN ON THIS SHEET.
E = EPOXY COATED REINFORCEMENT.
S = STIRRUP.
X = BAR IS INCLUDED IN SUBSTRUCTURE QUANTITIES.
V = BAR DIMENSIONS VARY IN EQUAL INCREMENTS BETWEEN DIMENSIONS SHOWN ON THIS LINE AND THE FOLLOWING LINE.
NO. EA. = NUMBER OF BARS OF EACH LENGTH.
NOMINAL LENGTHS ARE BASED ON OUT TO OUT DIMENSIONS SHOWN IN BENDING DIAGRAMS AND ARE LISTED FOR FABRICATOR'S USE. (NEAREST INCH)
ACTUAL LENGTHS ARE MEASURED ALONG CENTERLINE BAR TO THE NEAREST INCH.
PAYWEIGHTS ARE BASED ON ACTUAL LENGTHS.
FOUR ANGLE OR CHANNEL SPACERS ARE REQUIRED FOR EACH COLUMN SPIRAL. SPACERS ARE TO BE PLACED ON INSIDE OF SPIRALS. LENGTH AND WEIGHT OF COLUMN SPIRALS DO NOT INCLUDE SPLICES OR SPACERS.
REINFORCING STEEL (GRADE 60) = FY 60,000 PSI.

DETAILED Nov. 1990
CHECKED Nov. 1990

Sheet No 18 of 18

JACKSON COUNTY

J-526R

473344

MISSOURI HIGHWAY AND TRANSPORTATION COMMISSION

STATE	PROJ. NO.	SHEET NO.
MO.	FA-3334 (410)	11
SEC./S.R. 3	TWP. 49N	RGE. 33W

FINAL PLANS

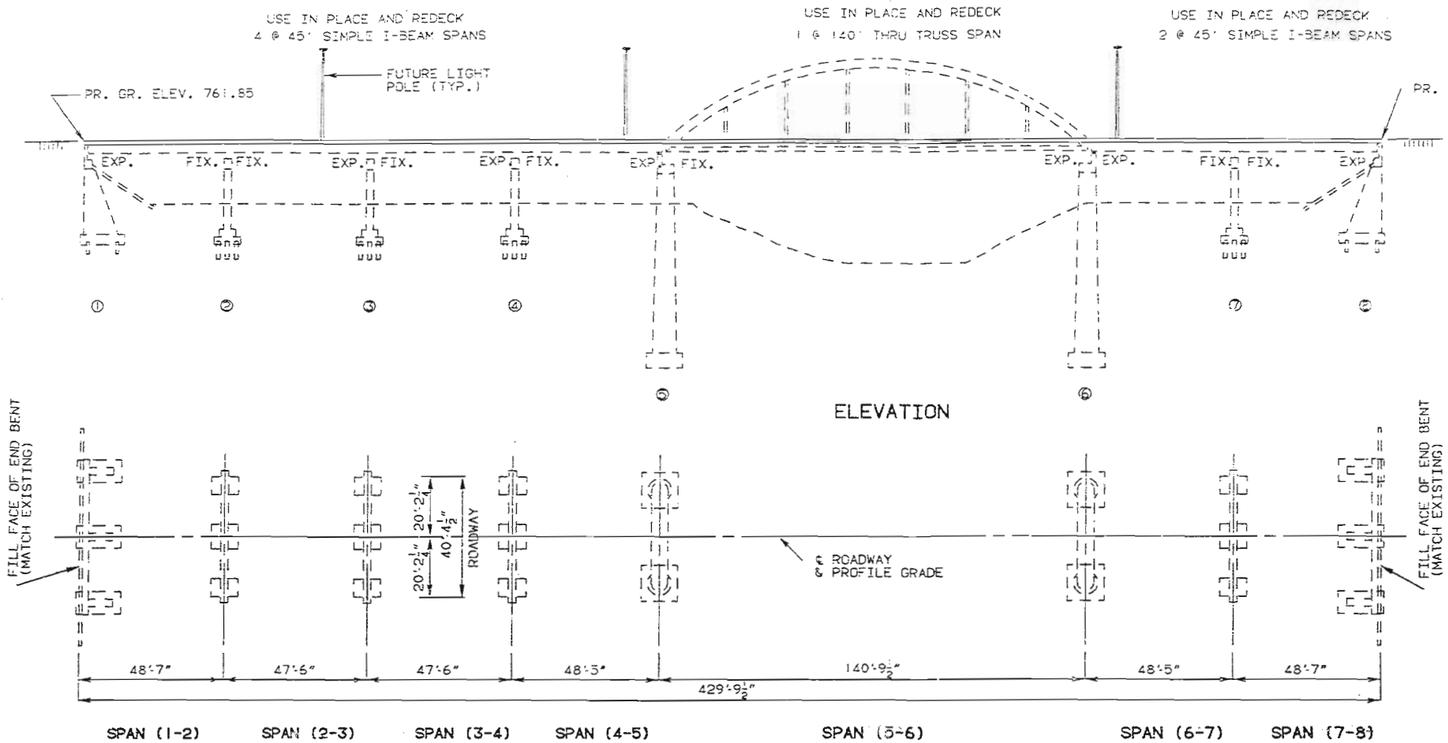

PLAN

GENERAL NOTES:

DESIGN SPECIFICATIONS: A.A.S.H.T.O.- 1989 LOAD FACTOR DESIGN

DESIGN LOADING
HS20-44 NO FUTURE WEARING SURFACE
MODIFIED 24,000# TANDEM AXLE

DESIGN UNIT STRESSES:
CLASS B CONCRETE (SUBSTRUCTURE) F'C=3,000 PSI
CLASS B1 CONCRETE (SUPERSTRUCTURE) F'C=4,000 PSI
CLASS B2 CONCRETE (SUPERSTRUCTURE) F'C=4,000 PSI
STRUCTURAL CARBON STEEL FS=20,000 PSI
REINFORCING STEEL (GRADE 60) FY=60,000 PSI

FIELD CONNECTIONS: FIELD CONNECTIONS, HIGH STRENGTH BOLTS 3/4"Ø. HOLES 13/16"Ø, EXCEPT AS NOTED.

JOINT FILLER: ALL JOINT FILLER SHALL MEET THE REQUIREMENTS OF STD. SPEC. 1057.2.4, EXCEPT AS NOTED.

REINFORCING STEEL: MINIMUM CLEARANCE TO REINFORCING STEEL SHALL BE 1 1/2", UNLESS OTHERWISE SHOWN.

TRAFFIC MAINTAINED: TRAFFIC OVER STRUCTURE TO BE MAINTAINED DURING CONSTRUCTION.

STEEL GRID SYSTEM: STEEL GRID FLOOR (HALF CONCRETE FILLED) (SEE SPECIAL PROVISIONS).

EXISTING WORK: OUTLINE OF OLD WORK IS INDICATED BY LIGHT DASHED LINES. HEAVY LINES INDICATE NEW WORK.

BARS BONDED IN OLD CONCRETE NOT REMOVED SHALL BE CLEANLY STRIPPED AND EMBEDDED INTO NEW CONCRETE WHERE POSSIBLE. IF LENGTH IS AVAILABLE, OLD BARS SHALL EXTEND INTO NEW CONCRETE AT LEAST 40 DIAMETERS FOR SMOOTH BARS AND 30 DIAMETERS FOR DEFORMED BARS, UNLESS OTHERWISE NOTED.

ROADWAY SURFACING ADJACENT TO BRIDGE ENDS TO MATCH NEW CONCRETE DECK (ROADWAY ITEM).

CONTRACTOR SHALL VERIFY ALL DIMENSIONS IN FIELD BEFORE ORDERING NEW STEEL.

HYDROLOGIC DATA			
DRAINAGE AREA	= 230	(SQ. MILES)	
DESIGN DISCHARGE	56,000	= CFS	(100 YEARS)
DESIGN HIGH WATER ELEVATION	=764.6		(100 YEARS)
ESTIMATED BACKWATER	= NEGLIGIBLE		

FINAL ~~ESTIMATED~~ QUANTITIES				
ITEM		SUBSTR.	SUPERSTR.	TOTAL
SPECIAL WORK (BRIDGES)	LUMP SUM			1
REMOVAL OF EXISTING BRIDGE DECK	SQ. FT.		23567	23567
(66 IN.) PEDESTRIAN FENCE (STRUCTURES)	LIN. FT.		856	856
CLASS B CONCRETE (SUBSTR)	CU. YD.	17.1		17.1
SUBSTRUCTURE REPAIR (UNFORMED)	SQ. FT.	1175		1175
SLAB ON STEEL	SQ. YD.		1362	1362
SIDEWALK (BRIDGES)	SQ. FT.		5449	5449
POLYMER CONCRETE OVERLAY	SQ. YD.		0	0
PREFORMED COMP. EXP. JT. SEAL (5.0")	LIN. FT.		41	41
REINFORCING STEEL (BRIDGES)	POUND	2140		2140
CONDUIT SYSTEM ON STRUCTURE	LUMP SUM			1
FABRICATED STRUCTURAL CARBON STEEL (I-BEAM)	POUND		113100	113100
STEEL GRID FLOOR (HALF CONCRETE FILLED)	SQ. FT.		5904	5904
SLAB DRAINS	EACH		64	64
BRIDGE GUARD RAIL (THRIE BEAM)	LIN. FT.		850	850

ESTIMATED QUANTITIES FOR C.I.P. SLAB			
TYPE OF SLAB	REINF. (LBS.) EPOXY	REINF. (LBS.) PLAIN	CONC. (CU. YDS.)
CAST-IN-PLACE CONVENTIONAL FORMS	82790		340.0

NOTE: THE TABLE OF ESTIMATED QUANTITIES FOR C.I.P. SLAB REPRESENTS THE QUANTITIES USED BY THE STATE IN PREPARING THE COST ESTIMATE FOR CONCRETE SLAB ON STEEL IN I-BEAM SPANS. VARIATIONS MAY BE ENCOUNTERED IN THESE ESTIMATED QUANTITIES, BUT THESE VARIATION CANNOT BE USED FOR AN ADJUSTMENT IN THE CONTRACT UNIT PRICE PER SQUARE YARD OF C.I.P. SLAB USED.

FINAL ~~ESTIMATED~~ QUANTITIES CONTINGENT ITEMS		SUBSTR	SUPERSTR	TOTAL
MODIFY PAINTING	NC		1	1
STEEL BRIDGE BEARINGS	LS	1		1
ANCHOR BOLTS (E.B.)	DOLLARS	11611.08		11611.08
REPLACE VERTICAL MEMBERS	LS		1	1
POLYMER CONCRETE OVERLAY	SQ.YD.		634	634

B.M. ◻ ON TOP OF RT. WING @ BENT NO. 1 ELEV. 761.69

REPAIRS TO BRIDGE OVER BLUE RIVER

STATE ROAD FROM RT. I-70 TO MANCHESTER TRAFFICWAY
IN KANSAS CITY

PROJECT NO. FA-3334 (410) STA. 37+25.0±
JOB NO. 4U 751-40 RTE. 40

JACKSON COUNTY

DATE: 3/6/91

STD. 606.23
STD. 706.35
J-523R

DESIGNED JAN. 1990
DETAILED JAN. 1990
CHECKED JAN. 1990

NOTE: THIS DRAWING IS NOT TO SCALE. FOLLOW DIMENSIONS.

SHEET NO. 1A OF 18

STATE	PROJ. NO.	SHEET NO.
MO.	F.A. 333 4(410)	12

FINAL PLANS

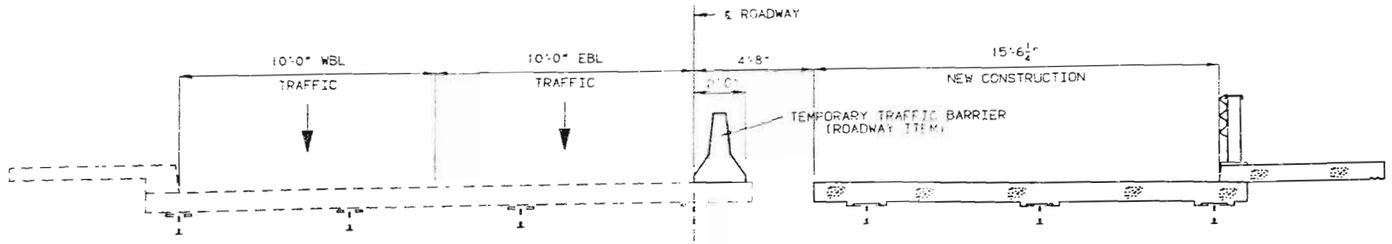

STAGE 1 CONSTRUCTION

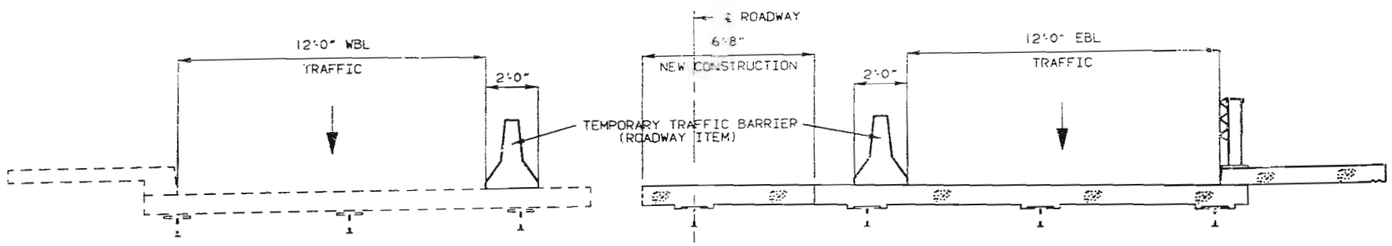

STAGE 2 CONSTRUCTION

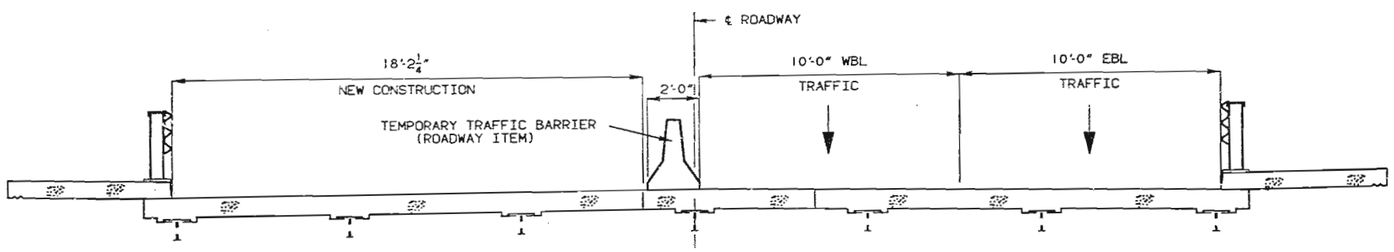

STAGE 3 CONSTRUCTION

STAGE CONSTRUCTION - I- BEAM SPANS

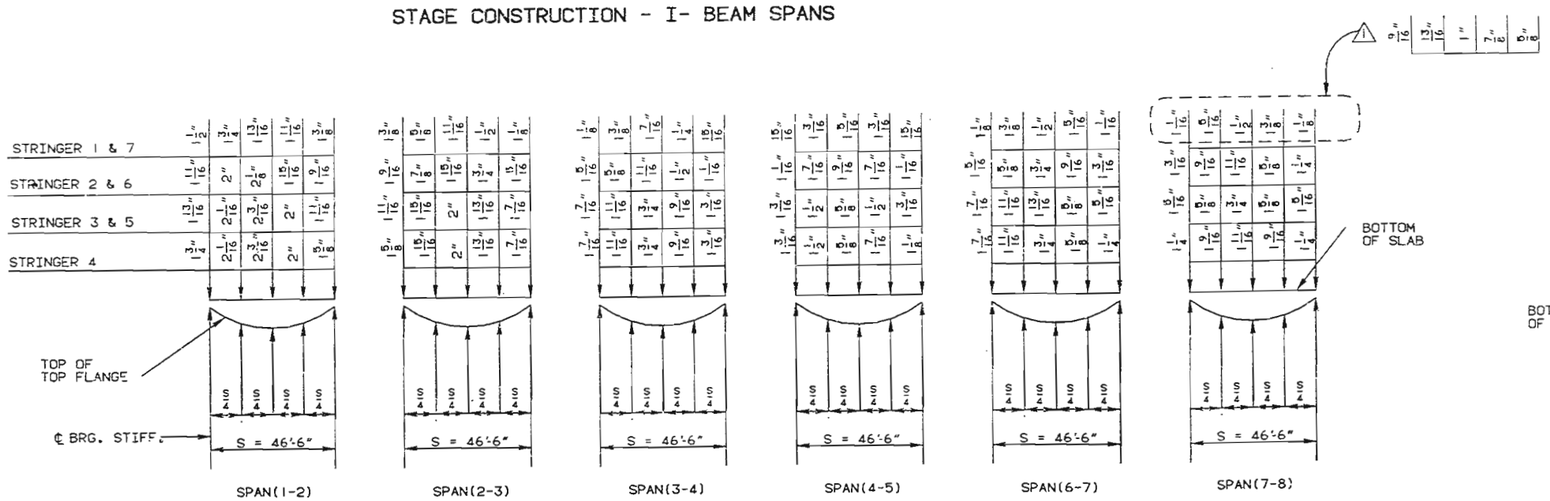

THEORETICAL SLAB HAUNCH

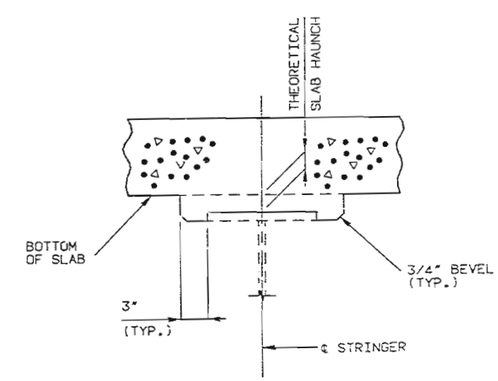

DETAIL OF SLAB HAUNCH

DETAILED JAN. 1990
CHECKED JAN. 1990

NOTE: THIS DRAWING IS NOT TO SCALE. FOLLOW DIMENSIONS.

SHEET NO. 2A OF 18

1 REVISED 7-17-91

JACKSON COUNTY J-526R

346

STATE	PROJ. NO.	SHEET NO.
MO.	F.A. 333A (410)	16

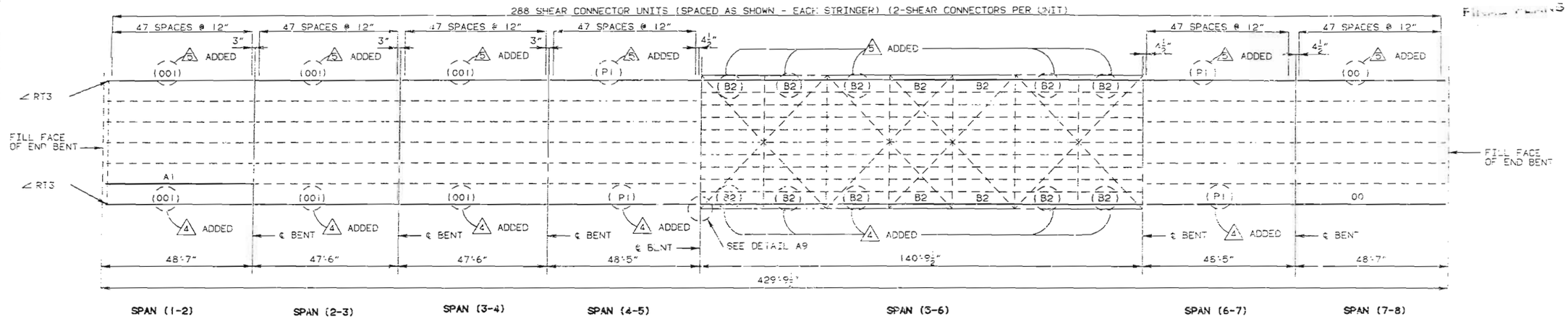

PLAN OF STRUCTURAL STEEL

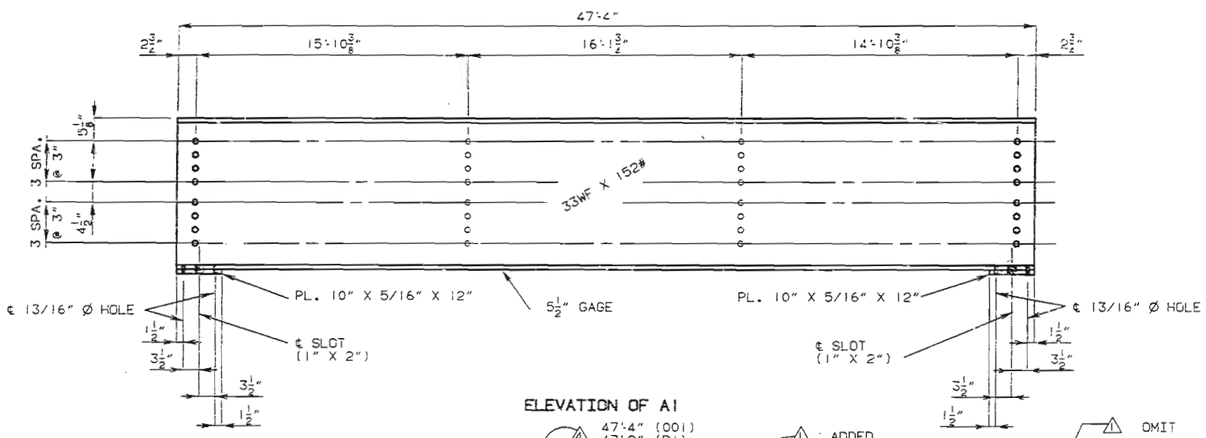

ELEVATION OF A1

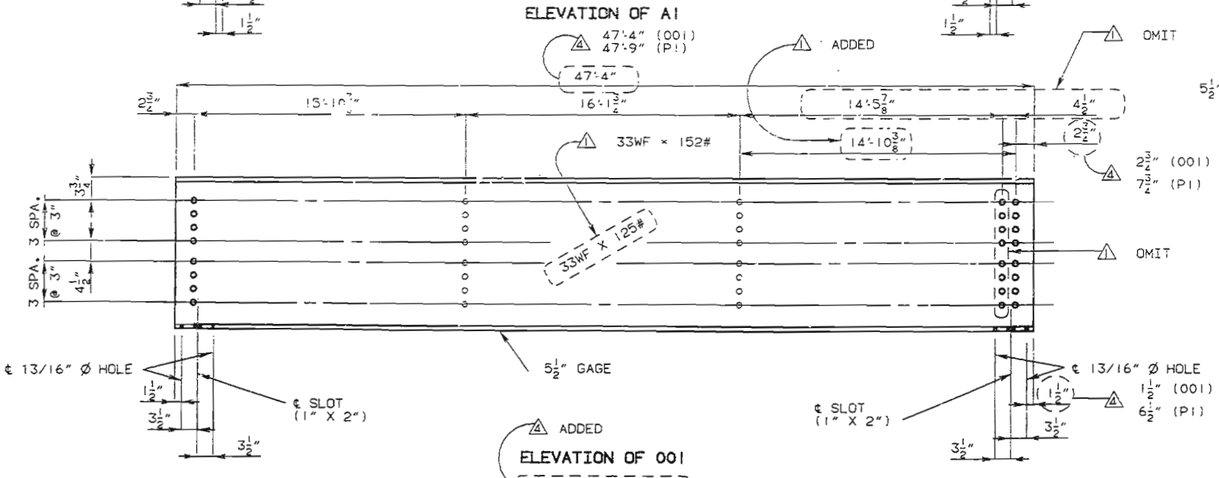

ADDED

ELEVATION OF 001

ELEVATION OF P1

NOTE: THIS DRAWING IS NOT TO SCALE. FOLLOW DIMENSIONS.

NOTE: FOR DETAILS OF SHEAR CONNECTORS SEE SHT. 7 .
FOR DETAIL OF ∠A9 SEE SHT. 7 .
FOR DETAIL OF ∠RT3 SEE SHT. 7 .

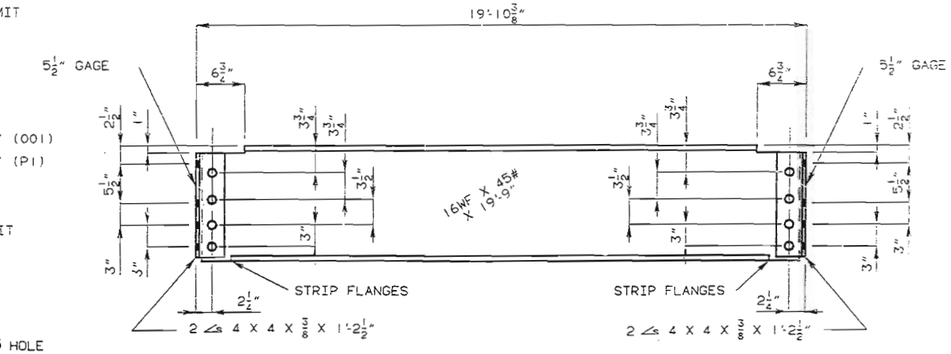

ELEVATION OF B2

NOTE: FIELD CONNECTIONS FOR B2, HIGH STRENGTH BOLTS 7/8" Ø, HOLES 15/16" Ø.

REVISED 11-15-91
REVISED 9-24-91
REVISED 7-17-91

DETAILED JAN. 1990
CHECKED JAN. 1990

SHEET NO. 6A OF 18

JACKSON COUNTY

J-526R

347

STATE	PROJ. NO.	SHEET NO.
MD.	F.A 3334(40)	17

FINAL PLANS

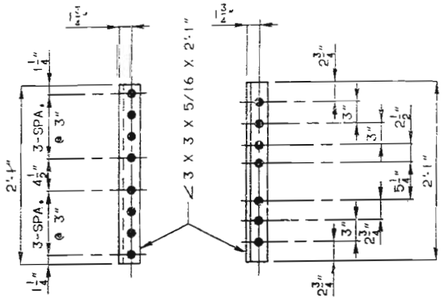

DETAIL OF ∠ RT3

1-REQUIRED AS SHOWN
1-REQUIRED OPPOSITE HAND

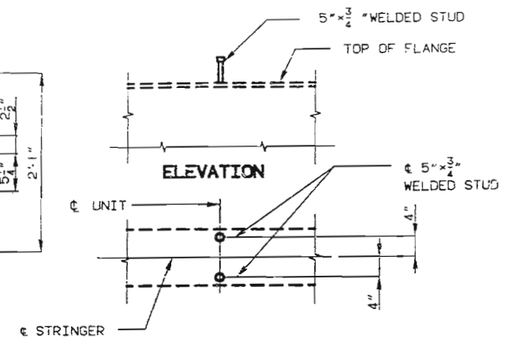

PLAN OF STUD CONN.

DETAILS OF SHEAR CONNECTORS

NOTE: WEIGHT OF 3045 LBS. OF SHEAR CONN. IS INCLUDED IN THE FABRICATED STRUCTURAL CARBON STEEL.

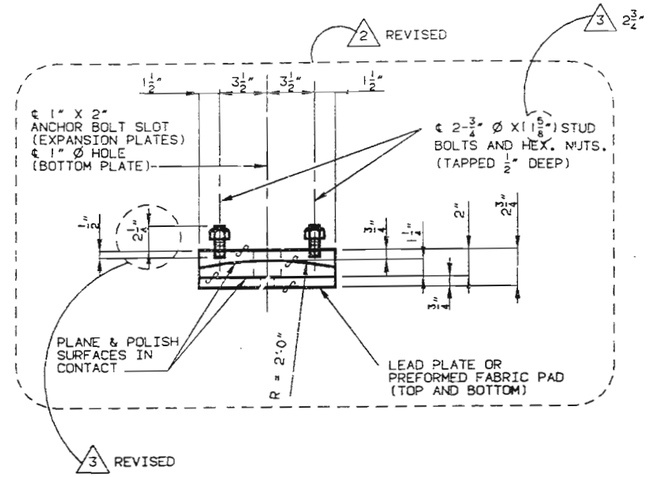

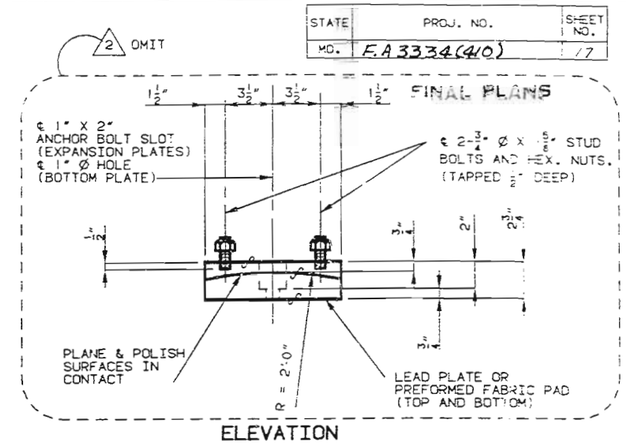

ELEVATION

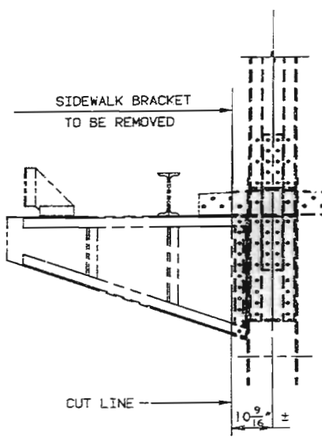

PART SECTION SHOWING BRACKET REMOVAL THRU TRUSS SPAN

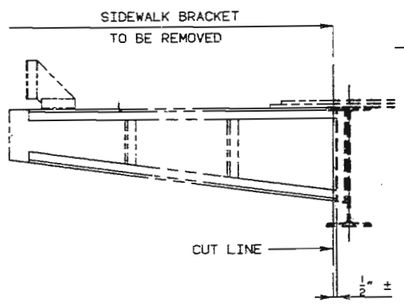

PART SECTION SHOWING BRACKET REMOVAL THRU I-BEAM SPANS

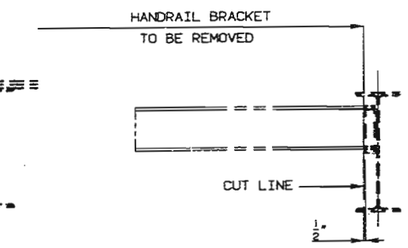

PART SECTION SHOWING BRACKET REMOVAL THRU I-BEAM SPANS

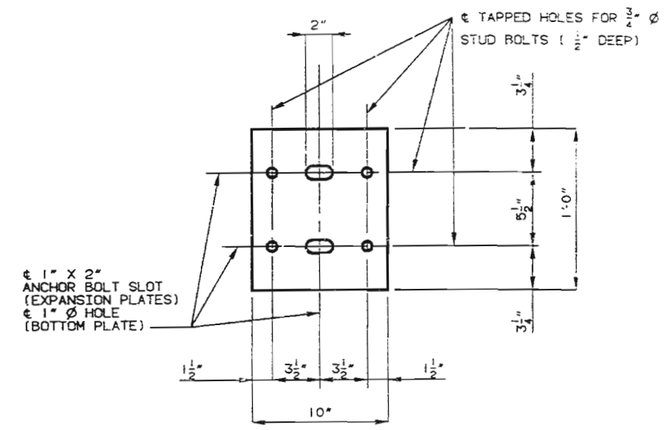

PLAN

DETAIL OF BEARING PLATE

(BT. 8 RT. STRINGER)

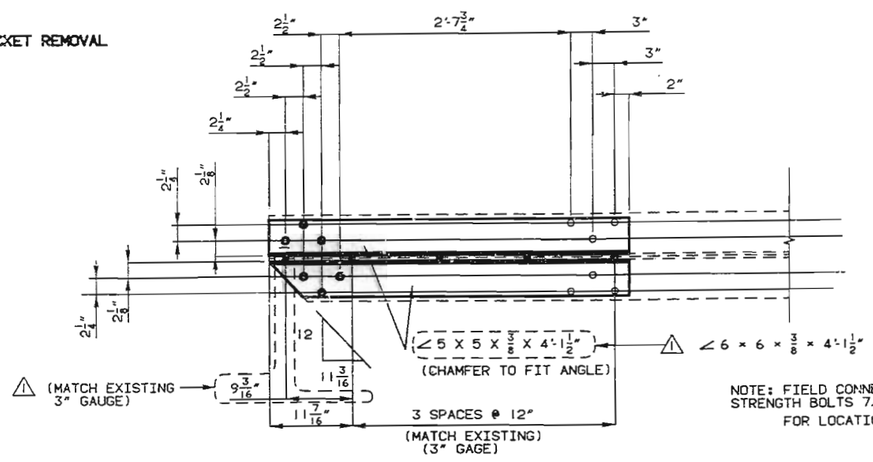

DETAIL A9

NOTE: FIELD CONNECTIONS FOR A9, HIGH STRENGTH BOLTS 7/8" Ø, HOLES 15/16" Ø.
FOR LOCATION OF A9 SEE SHT. 6 .

NOTES FOR BEARINGS:

√ INDICATES MACHINE FINISH SURFACE.

A LUBRICANT COATING SHALL BE APPLIED IN THE SHOP TO BOTH MATING SURFACES OF THE BEARING ASSEMBLY.

THE LUBRICANT, METHOD OF CLEANING, AND APPLICATION SHALL MEET THE REQUIREMENTS OF MIL-L-23398 AND MIL-L-46147 SUCH AS DOW CORNING'S MOLYKOTE 3402 BONDED LUBRICANT. THE COATED AREAS SHALL BE PROTECTED FOR SHIPPING AND ERECTION.

SHOP DRAWINGS ARE NOT REQUIRED FOR THE LEAD PLATES AND/OR THE PREFORMED FABRIC PADS.

3 REVISED 8-23-91
2 REVISED 8-6-91
1 REVISED 7-17-91

DETAILED JAN. 1990
CHECKED JAN. 1990

NOTE: THIS DRAWING IS NOT TO SCALE. FOLLOW DIMENSIONS.

SHEET NO. 7A OF 18

JACKSON COUNTY

J-526R

348

Appendix B:

Plates of Archival Photographs

Blue River Bridge (Bridge No. J0526)
Route 40, Jackson County, Missouri

Photographer: Toni Prawl, Missouri Department of Transportation
Date: April 29, 2013
Digital Images Provided to the Missouri State Historic Preservation Office

Photo Index:

#1 of 24. South side profile. View to northwest.

#2 of 24. South side main span. View to west.

#3 of 24. South side from near/center to far/left Pier 5, Bents 4, 3, 2, and West abutment (Bent 1). View to west.

#4 of 24. South side, east end. Bent 7 and Pier 6 in foreground of river. Pier 5 opposite river. View to west.

#5 of 24. Bent 7 and Pier 6 in foreground of river. View to south.

#6 of 24. Pier 5, Bents 4, 3, 2, and west abutment (Bent 1), near to far. View to southwest.

#7 of 24. Bridge sub-floor, support beams, stringers and cross-bracing, Pier 5 and Bent 4. View to southwest.

#8 of 24. Bent 2 in foreground and west abutment (Bent 1). View to west.

#9 of 24. Pier 6, foreground. Opposite river, Pier 5, Bents 4, 3, 2, and west abutment (Bent 1). View to southwest.

#10 of 24. North side Pier 6 connection detail and substructure. View to south.

#11 of 24. East abutment (Bent 8). View to southeast.

#12 of 24. East portal. View to south.

#13 of 24. East portal. View to southwest.

#14 of 24. South side truss detail. View to northwest.

#15 of 24. Detail of arch, strut, and web connection.

#16 of 24. Arch and web connections through east portal. View to west.

#17 of 24. Detail of upper arch connections. View to southwest.

#18 of 24. Detail of verticals and arch connections. View to south.

#19 of 24. Detail of verticals and arch connections. View to southeast.

#20 of 24. Verticals and arch connections toward east portal. View to east.

#21 of 24. Deck and west portal. View to east.

#22 of 24. West portal. View to northeast.

#23 of 24. North side main span. View to southeast.

#24 of 24. South side profile. View to northeast.

Photographic Methods and Processing:

The archival photographs accompanying this documentation were taken and processed according to the standards for photographs accompanying National Register of Historic Places documentation.[1] Toni Prawl took the photographs on April 29, 2013 using a Canon G10 digital camera. Images were captured in a raw (cr2) format, which was manipulated for light contrast before being converted to a .tiff and printed. The State Historic Preservation Office (SHPO) was consulted about the selection of photographs.

Prints were made on Epson Premium Glossy Photo Paper and used Epson Matte Black Ultra Chrome K3 Ink, both identified as "best" practices by the National Register photo policy[2], and which Epson identifies as having 85-year permanence under glass.[3] Kept in archival conditions the materials will exceed the 75 year permanence standard for the National Register, which is the standard being used for this project.

All images were numbered according to the National Register Photographic Imaging Policy[4] and burned onto a Delkin Archival Gold compact disc, which was provided to the State Historic Preservation Office along with this report. A copy of the photographs and .tiff images on an archival compact disc will also be maintained by the MoDOT Historic Preservation Section. and a copy will be provided to the Kansas City Public Library Missouri Valley Special Collections Department.

---

[1] National Register of Historic Places, "National Register Photo Policy Factsheet updated 5/15/2013," National Park Service Web-site, accessed August 1, 2013 from http://www.nps.gov/history/nr/bulletins/photopolicy/index.htm.

[2] National Register of Historic Places.

[3] Epson, "Permanence ratings from Wilhelm Imaging Research," accessed April 30, 2009 from www.epson.com/pdf/LightfastCPD_15334R2.pdf.

[4] National Register of Historic Places.

#1 of 24. South side profile. View to northwest.

#2 of 24. South side main span. View to west.

#3 of 24. South side from near/center to far/left Pier 5, Bents 4, 3, 2, and West abutment (Bent 1). View to west.

#4 of 24. South side, east end. Bent 7 and Pier 6 in foreground of river. Pier 5 opposite river. View to west.

#5 of 24. Bent 7 and Pier 6 in foreground of river. View to south.

#6 of 24. Pier 5, Bents 4, 3, 2, and west abutment (Bent 1), near to far. View to southwest.

#7 of 24. Bridge sub-floor, support beams, stringers and cross-bracing, Pier 5 and Bent 4. View to southwest.

#8 of 24. Bent 2 in foreground and west abutment (Bent 1). View to west.

#9 of 24. Pier 6, foreground. Opposite river, Pier 5, Bents 4, 3, 2, and west abutment (Bent 1). View to southwest.

#10 of 24. North side Pier 6 connection detail and substructure. View to south.

#11 of 24. East abutment (Bent 8). View to southeast.

#12 of 24. East portal. View to south.

#13 of 24. East portal. View to southwest.

#14 of 24. South side truss detail. View to northwest.

#15 of 24. Detail of arch, strut, and web connection.

#16 of 24. Arch and web connections through east portal. View to west.

#17 of 24. Detail of upper arch connections. View to southwest.

#18 of 24. Detail of verticals and arch connections. View to south.

#19 of 24. Detail of verticals and arch connections. View to southeast.

#20 of 24. Verticals and arch connections toward east portal. View to east.

#21 of 24. Deck and west portal. View to east.

#22 of 24. West portal. View to northeast.

#23 of 24. North side main span. View to southeast.

#24 of 24. South side profile. View to northeast.